GUARANTEED MAXIMUM PRICE AMENDMENT

EXHIBIT "R" TO CONSTRUCTION MANAGEMENT AGREEMENT DATED SEPTEMBER 5, 2024 BETWEEN VILLAGE OF WELLINGTON AND WHARTON-SMITH, INC. ("CONSTRUCTION MANAGER") FOR THE HIGH PRESSURE PUMP 9 IMPROVEMENT ("PROJECT") MADE THIS _____ DAY OF _____ 2026.

ARTICLE 1 - GUARANTEED MAXIMIM PRICE

1.1 Guaranteed Maximum Price ("GMP")

Pursuant to Section 3.2 of the Agreement, the Owner and Construction Manager hereby amend the Agreement to establish a Guaranteed Maximum Price. As agreed by the Owner and Construction Manager, the Guaranteed Maximum Price is an amount that the Contract Sum shall not exceed. The Contract Sum consists of the Construction Manager's Fee plus the Cost of the Work, as that term is defined in Article 8 of this Agreement, and the Owner's Contingency. There shall be no Fee on Owner's Contingency unless and until such time as use of the Owner's Contingency is authorized by Owner. Notwithstanding, Manager's insurance and bond costs shall not be subject to Construction Manager's Fee.

1.1.1 The Contract Sum is guaranteed by the Construction Manager not to exceed **Two Million One Hundred Thousand Nine Hundred Seventy-One Dollars ($2,100,971.00)** subject to additions and deductions by Change Order as provided in the Contract Documents. The GMP is subject to Construction Manager's Assumptions and Clarifications to the GMP attached as **Exhibit "R5".**

1.1.2 Allowances included in the Guaranteed Maximum Price are attached as **Exhibit "R4".**

1.1.3 The Guaranteed Maximum Price includes a fixed amount for General Conditions and General Requirements of **Six Hundred Eighty-One Thousand One Hundred Five Dollars and No cents ($681,105.00**) as detailed in **Exhibit "R7".** Construction Manager's General Conditions and General Requirements are fixed and shall not be subject to increase or decrease unless authorized by written Change Order as set forth in the Agreement.

1.1.4 The GMP includes an Owner's Contingency in the amount of **Ninety-Eight Thousand Eight Hundred Twenty-Nine Dollars ($98,829.00)** to be utilized as set forth in 7.2.3 of the Agreement.

1.1.5 It is the intent and understanding of Construction Manager in providing a GMP for this Work, that the Drawings, Plans and Specifications listed in the attached **Exhibit "R1"** provide for the construction of completed Work by the Construction Manager, including all devices, fasteners, materials or other work not shown in the Drawings and Specifications but which are reasonably inferable therefrom and any and all incidental accessories necessary to make the Work complete and operable in all respects (even if not specified in the description of the Work, but necessary for proper installation and operation of the Work under the Drawings and Specifications), all of which shall be included as part of the Cost of the Work. The expression "reasonably inferable" and similar terms in the Contract Documents shall be interpreted to mean reasonably inferable by a construction manager and general contractor familiar with the Project, having performed extensive Preconstruction Services, and exercising the care, skill and diligence of the Construction Manager by the Contract Documents. Notwithstanding, the foregoing shall not be construed to impose any design responsibility or liability on Construction Manager except where such design responsibility is an existing requirement of Florida law or the Contract Documents.

1.2 Schedule of Values. The Schedule of Values allocating the Contract Sum to the various portions of the Work is attached as **Exhibit "R2"**. The Construction Manager shall not imbalance its Schedule of Values nor artificially inflate any element thereof. Any violation of this provision by the Construction Manager shall constitute a material breach of this Construction Management Agreement. The Schedule of Values shall allocate the entire Guaranteed Maximum Price among the various portions of the Work, except that the Construction Manager's Fee shall be shown as a single separate item.

ARTICLE 2 – CONTRACT TIME

2.1 Date of Commencement. The Work to be performed under this Construction Management Agreement shall be commenced upon the issuance of a Notice to Proceed from Owner ("Date of Commencement").

2.2 Contract Time. Construction Manager shall meet all Milestones outlined in **Exhibit "R3"** and the entire Project shall reach Substantial Completion no later than **464** calendar days from the Date of Commencement. Construction Manager shall reach Final Completion no later than **45** days from the delivery of the Punch List as outlined in Paragraph 14.04(G) of the General Conditions, subject to any authorized extensions of time as set forth in the Contract Documents. All Work shall be performed in an expeditious manner.

2.2.1 Liquidated Damages. The parties to this Agreement agree that time is of the essence in the performance of this Agreement. Substantial Completion of the Work under this Agreement, as defined in Article 1 of the General Conditions shall be no later than the Substantial Completion date set forth in Section 2.2 of this GMP Amendment, subject to authorized extensions of time as set forth in the Article 12 of the General Conditions. In the event the Work is not substantially completed by the completion date stated above, and has not been extended by Change Order, the Owner shall be entitled to collect liquidated damages. Construction Manager and Owner agree that, because of the nature of the Work, the inability of the parties to precisely calculate actual damages for delay and the difficulty of determining these damages, the Construction Manager shall pay the Owner the sum of **five hundred dollars ($500.00)** for each calendar day of unexcused delay for failure to achieve Substantial Completion of the Work. Further, Construction Manager and Owner agree that, because of the nature of the Work, the inability of the parties to precisely calculate actual damages for delay and the difficulty of determining these damages, the Construction Manager shall pay the Owner the sum of **two-hundred fifty dollars ($250.00**) as liquidated damages for each and every calendar day of unexcused delay for failure to achieve Final Completion. It is hereby agreed that the amount of the per diem assessment for liquidated damages for the Construction Manager's failure to achieve Substantial Completion of the Work or Final Completion of the Work within the time specified in this Agreement is not a penalty and not excessive in light of the circumstances known to the parties at the time this Agreement is executed. The Owner's exercise of its right to terminate this Agreement shall not release the Construction Manager from its obligation to pay liquidated damages in the amount set forth herein. Such assessments shall be immediately due and payable to the Owner or, at the Owner's option, may be deducted from future payments that may be due and owing to Construction Manager. Any sums due and payable hereunder by the Construction Manager shall be payable, not as a penalty, but as liquidated damages representing an estimate of delay damages likely to be sustained by the Owner, estimated at or before the time of executing this Agreement. Construction Manager's liability for liquidated damages shall survive completion and termination of the Agreement and are in addition to Owner's other remedies available under the Contract Documents and by law.

ARTICLE 3 - MISCELLANEOUS

3.1 In addition to Construction Manager's and Subcontractor's warranty set forth in 6.19 of the General Conditions, Construction Manager shall be responsible for providing the Extended Warranties as set forth in **Exhibit "R6".**

3.2 The GMP Amendment incorporates the following exhibits:

1. Drawings, plans and specifications listed in the attached List of Drawings attached hereto as **Exhibit "R1";**
2. Construction Manager's Schedule of Values to be attached as **Exhibit "R2";**
3. Construction Schedule to be attached as **Exhibit "R3";**
4. Construction Manager's Allowances to be attached as **Exhibit "R4";**
5. Construction Manager's Assumptions and Clarifications to the GMP, if any, to be attached as **Exhibit "R5";**

6. List of extended warranties to be attached as **Exhibit "R6";**
7. Construction Manager's Stipulated General Conditions and General Requirements to be attached as **Exhibit "R7".**
8. Submittal Schedule to be attached as **Exhibit "R8".**

This GMP Amendment and all Exhibits are hereby incorporated as part of the Contract Documents as defined in the Agreement.

3.3 Construction Manager shall deliver Payment and Performance Bonds in accordance with Fla. Stat. §255.05 and the forms set forth as **Exhibit "E"** from a surety registered in Florida and acceptable to Owner for the full value of the Guaranteed Maximum Price, plus all change orders.

3.4 Other than as modified herein, the terms and conditions set forth in the Agreement, General Conditions and other Contract Documents remain in full force and effect.

[Signatures on following page]

IN WITNESS WHEREOF, Owner and Construction Manager have signed this GMP Amendment. One counterpart each has been delivered to Owner, Construction Manager, and the Engineer. All portions of the Contract Documents have been signed or identified by Owner and Construction Manager or by the Engineer on their behalf.

OWNER:

VILLAGE OF WELLINGTON

By _____

Michael Napoleone, Mayor

Attest: _____

Chevelle Hall, Wellington's Clerk

(SEAL)

Address for giving notices

12300 Forest Hill Boulevard

Wellington, Florida 33414

APPROVED AS TO FORM AND
LEGAL SUFFICIENCY

_____

Laurie Cohen, Attorney for Wellington

CONSTRUCTION MANAGER:

WHARTON-SMITH, INC.

By _____

Printed Name/Title_____

Attest: _____

Printed Name

(CORPORATE SEAL)

Address for giving notices

5210 Hood Road

Palm Beach Gardens, Florida 33418

License No. CGC1511243

Agent for service of process:

_____

(If Construction Manager is a corporation, attach evidence of authority to sign.)

Wharton-Smith, Inc.
CONSTRUCTION GROUP

CORPORATE RESOLUTION

I, the undersigned Secretary of Wharton Smith, Inc., a corporation organized and existing under the laws of the State of Florida, do hereby certify that a meeting of the Board of Directors of said corporation, duly held on February 13, 2023, a quorum being present, the following resolution was adopted and entered upon the regular minute book of said corporation, is in accordance with the by-laws and is now in full force and effect to-wit:

The current list of qualifiers to act for the business organization in all matters connected with its contracting business has now been amended to read:

Ronald F. Davoli
George E. Smith
Timothy S. Smith
Stephanie L. Pompeo
Patrick J. Hewitt
Kenneth E. Marcell III
Darin A. Crafton
Todd H. O'Donnell
Gregory L.Williams
Thomas D. Iarossi
Andre P. Boagni

I HEREBY certify that the foregoing is a true and exact copy of the resolution adopted by the Board of Directors of this Corporation and that such resolution has not been amended, modified, or revoked and is still in force and effect.

Signed and sealed this 13th day of February 2023.
(Seal of Corporation)

WHARTON-SMITH, INC. CORPORATE SEAL April 2, 1984 FLORIDA

Stephanie Pompeo
Stephanie L. Pompeo, Secretary

George E. Smith, Director

Timothy S. Smith, Director

Ronald F. Davoli, Director

Detail by Entity Name

Florida Profit Corporation
WHARTON-SMITH, INC.

Filing Information

Document Number	G94383
FEI/EIN Number	59-2392802
Date Filed	04/03/1984
Effective Date	04/02/1984
State	FL
Status	ACTIVE
Last Event	AMENDMENT
Event Date Filed	03/21/2024
Event Effective Date	NONE

Principal Address

750 MONROE RD
SANFORD, FL 32771

Changed: 04/25/2006

Mailing Address

750 Monroe Road
Sanford, FL 32771

Changed: 01/02/2020

Registered Agent Name & Address

CORPORATION SERVICE COMPANY
1201 HAYS STREET
TALLAHASSEE, FL 32301-2525

Name Changed: 10/07/2019

Address Changed: 10/07/2019

Officer/Director Detail

Name & Address

Title President, CEO, Treasurer

SMITH, TIMOTHY S
750 MONROE RD
SANFORD, FL 32771

Title Chairman, Asst. Secretary

DAVOLI, RONALD F
750 MONROE RD
SANFORD, FL 32771

Title Director

Marcell , Kenneth E, III
750 MONROE RD
SANFORD, FL 32771

Title COO

HEWITT, PATRICK J
750 MONROE RD
SANFORD, FL 32771

Title COO

CRAFTON, DARIN A
750 MONROE ROAD
Sanford, FL 32771

Title Director

O'Donnell, Todd H
750 MONROE RD
SANFORD, FL 32771

Title Director

Williams, Gregory L
750 MONROE RD
SANFORD, FL 32771

Title CFO, Secretary

POMPEO, STEPHANIE
750 MONROE RD
SANFORD, FL 32771

Title Director

BOAGNI, ANDRE
750 MONROE RD
SANFORD, FL 32771

Annual Reports

Report Year	Filed Date
2023	01/03/2023
2024	01/03/2024
2025	01/08/2025

Document Images

01/08/2025 -- ANNUAL REPORT	View image in PDF format
03/21/2024 -- Amendment	View image in PDF format
01/03/2024 -- ANNUAL REPORT	View image in PDF format
04/21/2023 -- Amendment	View image in PDF format
02/17/2023 -- Amendment	View image in PDF format
01/03/2023 -- ANNUAL REPORT	View image in PDF format
04/12/2022 -- Amendment	View image in PDF format
01/04/2022 -- ANNUAL REPORT	View image in PDF format
07/06/2021 -- AMENDED ANNUAL REPORT	View image in PDF format
01/06/2021 -- ANNUAL REPORT	View image in PDF format
07/06/2020 -- Amendment	View image in PDF format
01/31/2020 -- Amendment	View image in PDF format
01/21/2020 -- AMENDED ANNUAL REPORT	View image in PDF format
01/02/2020 -- ANNUAL REPORT	View image in PDF format
10/07/2019 -- Reg. Agent Change	View image in PDF format
01/02/2019 -- ANNUAL REPORT	View image in PDF format
01/02/2018 -- ANNUAL REPORT	View image in PDF format
03/30/2017 -- AMENDED ANNUAL REPORT	View image in PDF format
01/03/2017 -- ANNUAL REPORT	View image in PDF format
09/12/2016 -- AMENDED ANNUAL REPORT	View image in PDF format
01/06/2016 -- ANNUAL REPORT	View image in PDF format
06/18/2015 -- AMENDED ANNUAL REPORT	View image in PDF format
05/18/2015 -- Amendment	View image in PDF format
04/07/2015 -- AMENDED ANNUAL REPORT	View image in PDF format
02/04/2015 -- AMENDED ANNUAL REPORT	View image in PDF format
01/05/2015 -- ANNUAL REPORT	View image in PDF format
12/01/2014 -- AMENDED ANNUAL REPORT	View image in PDF format
06/23/2014 -- AMENDED ANNUAL REPORT	View image in PDF format
01/10/2014 -- ANNUAL REPORT	View image in PDF format
04/12/2013 -- AMENDED ANNUAL REPORT	View image in PDF format
01/16/2013 -- ANNUAL REPORT	View image in PDF format
01/10/2012 -- ANNUAL REPORT	View image in PDF format
04/18/2011 -- ANNUAL REPORT	View image in PDF format
01/05/2011 -- ANNUAL REPORT	View image in PDF format
07/08/2010 -- Amendment	View image in PDF format
01/20/2010 -- ANNUAL REPORT	View image in PDF format
01/30/2009 -- ANNUAL REPORT	View image in PDF format
01/23/2008 -- ANNUAL REPORT	View image in PDF format
03/01/2007 -- ANNUAL REPORT	View image in PDF format

04/25/2006 -- ANNUAL REPORT	View image in PDF format
02/17/2006 -- Amendment	View image in PDF format
01/04/2005 -- ANNUAL REPORT	View image in PDF format
04/02/2004 -- ANNUAL REPORT	View image in PDF format
02/17/2003 -- ANNUAL REPORT	View image in PDF format
02/18/2002 -- ANNUAL REPORT	View image in PDF format
10/03/2001 -- Amendment	View image in PDF format
04/19/2001 -- ANNUAL REPORT	View image in PDF format
04/21/2000 -- ANNUAL REPORT	View image in PDF format
04/22/1999 -- ANNUAL REPORT	View image in PDF format
05/13/1998 -- ANNUAL REPORT	View image in PDF format
05/16/1997 -- ANNUAL REPORT	View image in PDF format
05/01/1996 -- ANNUAL REPORT	View image in PDF format
04/07/1995 -- ANNUAL REPORT	View image in PDF format

Florida Department of State, Division of Corporations

WTP Membrane Plant #2 (M2) High Pressure Pump 9 Improvements

Village of Wellington

GMP Proposal

November 17, 2025

Presented by Wharton-Smith (CMAR)

Wharton-Smith Contact:
Greg Williams – Vice President
gwilliams@whartonsmith.com

Engineer: Kimley-Horn

TABLE OF CONTENTS

SECTION 1 – EXECUTIVE SUMMARY

SECTION 2 – EXHIBIT R1 DRAWINGS, PLANS AND SPECIFICATIONS

SECTION 3 – EXHIBIT R2 SCHEDULE OF VALUES

SECTION 4 – EXHIBIT R3 CONSTRUCTION SCHEDULE

SECTION 5 – EXHIBIT R4 CONSTRUCTION MANAGER'S ALLOWANCES

SECTION 6 – EXHIBIT R5 ASSUMPTIONS AND CLARIFICATIONS

SECTION 7 – EXHIBIT R6 LIST OF EXTENDED WARRANTIES

SECTION 8 – EXHIBIT R7 GENERAL CONDITIONS AND GENERAL REQUIREMENTS

SECTION 9 – EXHIBIT R8 SUBMITTAL SCHEDULE

SECTION 1 – EXECUTIVE SUMMARY

November 17, 2025

Mrs. Anjuli Panse, PE
Director of Utilities
Village of Wellington
12300 Forest Hill Blvd.
Wellington, FL 33414

Re: WTP Membrane Plant #2 (M2) High Pressure Pump 9 Improvements
GMP Proposal

Dear Mrs. Panse:

Wharton-Smith is pleased to submit the Guaranteed Maximum Price (GMP) proposal for the WTP Membrane Plant 2 (M2) High Pressure Pump 9 Improvements project. A comprehensive breakdown of material, equipment, subcontractor, and labor is provided in the supporting documentation following this letter. The GMP is valued at **$2,100,971.00** and is broken out as follows:

- **Base Bid: $1,704,215**
- **Alternate Bid: $396,756**

Please note the following clarifications regarding this proposal:

1. Per discussions with the Village of Wellington, the following items are provided in accordance with the CMAR GMP Amendment Guide:
    a. The Daily Liquidated Damages are as follows:
        i. $500 per calendar day for Substantial Completion
        ii. $250 per calendar day for Final Completion.
    b. The GMP includes an Owner Controlled Contingency of $98,829.00, broken out as follows:
        i. Base Bid Owner Contingency: $78,482
        ii. Alternate Bid Owner Contingency: $20,347
    c. Project shall reach Substantial Completion no later than 464 calendar days from the Date of Commencement.
    d. The following is a list of the competitively bid work packages and the recommended low responsive bidder for each. Please refer to Section 3 for the detailed bid evaluations.
        i. Master Plant Contractor – Wharton-Smith
        ii. Electrical – Loveland Electric
        iii. Instrumentation & Controls – CC Control
    e. There are no proposed Owner Direct Purchases for this project.
    f. The proposed GMP is valued at $2,100,971.00. Refer to Exhibit R2 for the Cost of Work organized by the scope of work bid packages, allowances, Owner's Contingency, and the Construction Manager's Fee.
2. The work is in accordance with Kimley-Horn's "Membrane Plant #2 (M2) High Pressure Pump 9 Improvements" conformed documents dated May 2025. Please refer to Section 2 for the Drawings and Specifications.

3. The GMP includes work for High Pressure Pump 9 along with the associated piping and Trains 6, 7, and 8 concentrate piping modifications. Pricing for the bid proposals received will remain valid for a period of one hundred and eighty (180) days after the bid date.
4. We have included an Owner Controlled Contingency of $98,829.00. Please note that this contingency is currently shown below the line without fee, fee to be included on contingency usage once brought into the project as approved by the Village of Wellington.
5. We have included the following allowances for work items with undefined scopes at this time. Please note that the allowances are currently shown below the line without fee, fee to be included on allowance usage once brought into the project as approved by the Village of Wellington.
    a. Coatings - $35,000
    b. Independent Testing - $10,000
    c. Flow Meter Installation - $130,000
6. We have included a performance and payment bond and insurance.
7. ERP, FDEP, FDOT, & ROW permit fees are by others.
8. Village of Wellington Building Department fees are by others.
9. Costs associated with Davis-Bacon Wages & AIS requirements have not been included.
10. It is assumed that the Village of Wellington will provide power and water for use during construction and startup at no cost.
11. We have not included any costs for Lead/Asbestos Survey nor abatement of any kind.
12. Pricing includes no knowledge of buried or concealed conditions beyond what is indicated or shown on documents received to date. Unforeseen conflicts and utilities will be submitted as additional costs.
13. All Pricing (Labor, Material, Equipment, Subcontract) is based on current market value with no escalation or inflation adjustment. Duration of Material lead times are based on current market conditions.
14. The following is Owner furnished equipment:
    a. High Pressure Pump 9, Motor and Can
    b. Cartridge Filter Housing
    c. Micron Filters
    d. VFD
15. Owner furnished Equipment is subject to Engineer's shop drawing submittal review and approval. The Equipment services and features specified within Bid Documents are to be verified by Direct Purchaser prior to their system integration by Contractor.
16. We have included administrative costs to coordinate field services with Owner furnished equipment vendors. This is limited to communication and scheduling. Wharton Smith and subcontractors are not responsible for delays associated with these vendors.
17. Procurement, review, submission, and copies of Operation and Maintenance Manuals for Owner Furnished Equipment is excluded. It is the Owner's responsibility to coordinate this effort and share all pertinent information with Wharton Smith in a timely manner.
18. All work required per Specification Section 02670 *Flushing, Testing and Disinfection* is excluded as no discharge and bacteriological sampling locations have been identified in the bid drawings. Wharton Smith responsibility will be limited to swabbing all new piping to be installed on the Raw Water Feed System. If required, additional form of disinfection, temporary piping, flushing, and bacteriological sampling will be coordinated with the Owner and submitted as additional cost.
19. Spare Parts for all Owner Furnished Equipment are excluded.
20. Factory testing for all Owner Furnished Equipment is excluded. This includes coordinating, reviewing test reports, and submission.

21. Vibration testing costs per Specification Section 11936 *Vertical Turbine High Pressure Pump* and Specification Section 13080 *Vibration and Alignment*, are excluded as these costs were carried by Afton for Owner Furnished HPP 9. Wharton Smith responsibility will be limited to coordinating with Afton.
22. Part 1 of Specification Sections 16480 and 16485/16495 is excluded since the manufacturer's services were included in the direct Purchase Order from the Village of Wellington to Schneider.
23. Offloading and storage of Owner Furnished Equipment is excluded.
24. Part 3.1 of Specification Section 16485/16495 states that a 10% payment retainage will be released to Contractor upon final acceptance of the work. Per Executed CMAR Agreement, a 5% retainage will be held.
25. Additional material cost or delays to the Project Schedule due to Owner or Owner's contracted Supplier will be assessed and Contractor reserves the right to submit any applicable claims within the Terms and Conditions of the Contract.
26. It is assumed that the 10" 90° bends can be modified and reinstalled, therefore, we have included cost for these modifications per General Note No. 9 on Sheet M-2. If for reasons outside of our control, new 90° bends are required, a Contingency Authorization Request will be submitted for the additional cost.
27. Cost to modify existing grating is included as shown in the bid documents. Additional modifications will be submitted as additional cost.
28. As requested by the Village of Wellington, cost to furnish the micron filters is not included.
29. Coiling, hanging, or arranging of existing wiring and other items present within existing PLC-RO2 or PCPMOVRO2 is excluded.
30. Contractor has excluded cost to perform post-construction inspection referenced in Spec Section 01700-1.9. It is the Owner's responsibility to send notification of any deficiencies concerning material, equipment, and workmanship furnished by Wharton Smith within the warranty period established in the bid documents. Deficiencies relating to Owner Furnished Equipment will be the sole responsibility of the Owner.
31. It is assumed that Engineer and Owner will review and return submittals within 14 calendar days. RFIs and resubmittals shall be returned within 7 calendar days.
32. It is assumed that Contractor will utilize the Owner's existing gantry crane and that the crane's capacity is sufficient for the cartridge filter and HPP. Should the gantry crane capacity not be sufficient, Contractor will seek alternate method of hoisting for additional cost.
33. Pricing only includes materials and equipment specified in the bid documents. As there are no references to the Village's Approved Product List (APL), those approved products have been excluded.
34. Please refer to Section 4 for the proposed GMP schedule. Please note that the P6 schedule is referenced in "work days" as the program automatically accounts for weekends and holidays. The contract time is expressed in "calendar days". 508 calendar days from Notice of Commencement to Final Completion indicated equates to the 522 work days shown in the P6 schedule. Our current estimated duration of on-site construction is 8 months.

As always, I am available to discuss at your earliest convenience.

Respectfully,

Eliana Corie
Project Manager
Wharton-Smith, Inc.

SECTION 2 – EXHIBIT R1 DRAWINGS, PLANS AND SPECIFICATIONS

Technical Specifications

Water Treatment Plant (WTP)
Membrane Plant #2 (M2)
High Pressure Pump No. 9 Improvements

Prepared For:
Village of Wellington

Prepared By:
Kimley-Horn and Associates, Inc.
1920 Wekiva Way, Suite 200
West Palm Beach FL 33411
Ca 00000696

April 2025
PROJECT NO. 144957081

Kimley»Horn

SECTION 01000

TABLE OF CONTENTS

Division	Section	Title
1		**GENERAL REQUIREMENTS**
	01010	Summary of Work
	01300	Submittals
	01410	Testing Laboratory Services
	01600	Material and Equipment
	01700	Project Closeout
	01720	Project Record Drawings
	01730	Operation and Maintenance Manuals
2		**SITE WORK**
	02065	Demolition
	02670	Flushing, Testing and Disinfection
3		**CONCRETE**
	03100	Concrete Formwork
	03200	Concrete Reinforcement
	03300	Cast-in-Place Concrete
4		**MASONRY – NOT USED**
5		**METALS**
	05500	Miscellaneous Metals
	05700	Anchors, Fasteners and Injection Adhesives
6		**WOOD AND PLASTICS – NOT USED**
7		**THERMAL AND MOISTURE PROTECTION – NOT USED**
8		**DOORS AND WINDOWS – NOT USED**
9		**FINISHES**
	09900	Painting
10		**SPECIALTIES**
	10400	Identifying Devices
11		**EQUIPMENT**
	11245	Cartridge Filters - (Owner Furnished)
	11280	Control Valves
	11936	Vertical Turbine High Pressure Pump - (Owner Furnished)
12		**FURNISHINGS – NOT USED**
13		**SPECIAL CONSTRUCTION**
	13080	Vibration and Alignment
14		**CONVEYING SYSTEMS – NOT USED**
15		**MECHANICAL**

	15100	Piping, Valves, and Fittings
16		**ELECTRICAL**
	16010	Basic Electrical Requirements
	16050	Basic Electrical Materials
	16110	Raceways
	16120	Conductors
	16405	Electric Motors
	16450	Grounding
	16480	Low Voltage Motor Control
	16485	Variable Frequency Drives – (Owner Furnished)
	16950	Electrical Testing
	17301	Instrumentation and Controls

MEMBRANE PLANT #2 (M2)
HIGH PRESSURE PUMP 9 IMPROVEMENTS

PREPARED FOR

VILLAGE OF WELLINGTON

MAY 2025

VILLAGE COUNCIL

MAYOR	MICHAEL J. NAPOLEONE
VICE MAYOR	TANYA SISKIND
COUNCILMAN	JOHN T. MCGOVERN
COUNCILWOMAN	MARIA S. ANTUÑA
COUNCILWOMAN	AMANDA SILVESTRI

VILLAGE MANAGER	JIM BARNES
ASSISTANT VILLAGE MANAGER	ED DE LA VEGA
DEPUTY VILLAGE MANAGER	TANYA W. QUICKEL
UTILITY DIRECTOR	ANJULI PANSE, P.E.

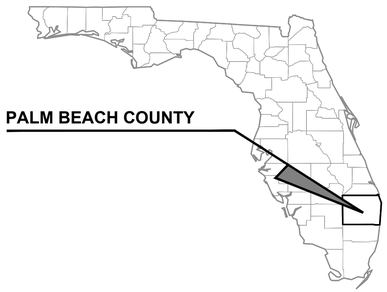

VICINITY MAP
N.T.S. or AS NOTED

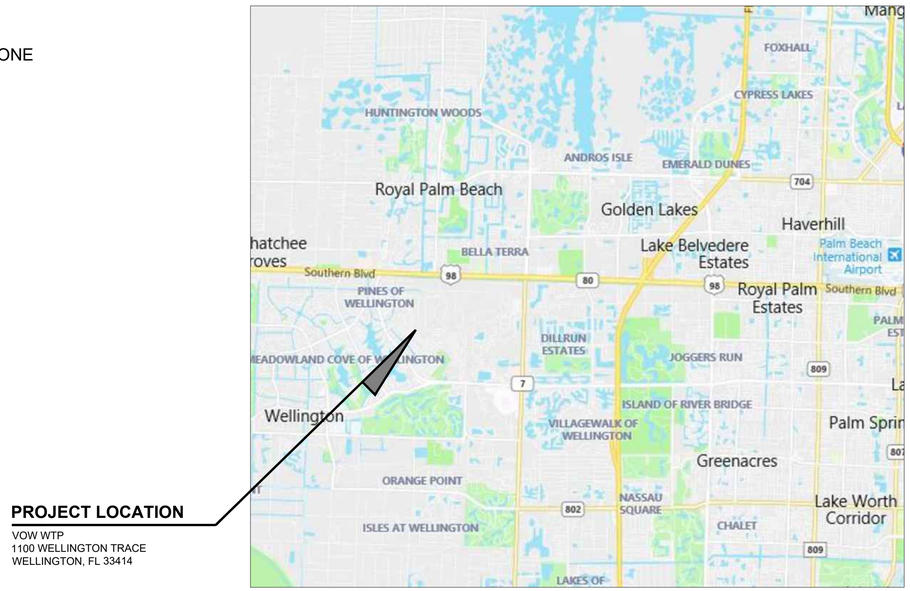

LOCATION MAP
N.T.S. or AS NOTED

SHEET LIST	
Sheet Number	Sheet Title
G-1	COVER SHEET
G-2	SITE KEY MAP, PROCESS AREA PLAN AND GENERAL NOTES
G-3	PROCESS FLOW DIAGRAM
M-1	HPP ROOM DEMOLITION PLAN AND SECTIONS
M-2	HPP ROOM PROPOSED PLAN AND SECTIONS
M-3	MECHANICAL DETAILS
M-4	NF ROOM DEMOLITION PLAN AND SECTIONS
M-5	NF ROOM PROPOSED PLAN AND SECTIONS
M-6	CONSTRUCTION DETAILS
E-1	ELECTRICAL LEGEND AND SYMBOLS
E-2	ELECTRICAL GENERAL NOTES AND SPECIFICATIONS
E-3	MEMBRANE BUILDING 2 MODIFIED ELECTRICAL PLAN
E-4	MCC-1002 MODIFIED ONE-LINE DIAGRAM
E-5	ELECTRICAL RISER DIAGRAMS AND SCHEDULES
E-6	ELECTRICAL SCHEMATICS
E-7	ELECTRICAL STANDARD DETAILS
I-1	INSTRUMENTATION LEGEND & SYMBOLS
I-2	MODIFIED HIGH PRESSURE PUMP P&ID
I-3	MODIFIED MEMBRANE TRAIN P&ID
I-4	EXISTING PCPMOVRO2 MODIFICATION
I-5	INSTRUMENTATION STANDARD DETAILS

CONFORMED SET

No.	REVISIONS	DATE	BY
1	CONTRACT MODIFICATIONS	10/16/24	NPOB

Kimley»Horn

© 2025 KIMLEY-HORN AND ASSOCIATES, INC.
1920 WEKIVA WAY SUITE 200, WEST PALM BEACH, FL 33411
PHONE: 561-845-0665 FAX: 561-863-8175
WWW.KIMLEY-HORN.COM REGISTRY NO. 696

KHA PROJECT 144957081
DATE MAY 2025
SCALE AS SHOWN
DESIGNED BY NPOB
DRAWN BY DC
CHECKED BY NPOB

HIGH PRESSURE PUMP NO. 9 IMPROVEMENTS
PREPARED FOR
VILLAGE OF WELLINGTON
PALM BEACH COUNTY FLORIDA

NICHOLAS PETER OLEISKY BLACK
LICENSE No 84908
STATE OF FLORIDA
PROFESSIONAL ENGINEER

THIS ITEM HAS BEEN DIGITALLY SIGNED AND SEALED BY
ON THE DATE ADJACENT TO THE SEAL.
THE SIGNATURE MUST BE VERIFIED ON ANY ELECTRONIC COPIES.

COVER SHEET

SHEET NUMBER
G-1
1 OF 21

Plotted By:Comu, Daniel Sheet Set:VOW HPP9 Layout:G-1 COVER SHEET April 30, 2025 08:36:50am K:\WPB_Civil\144957081 - HPP9\CAD\Plansheets\G-1 COVER SHEET.dwg
This document, together with the concepts and designs presented herein, as an instrument of service, is intended only for the specific purpose and client for which it was prepared. Reuse of and improper reliance on this document without written authorization and adaptation by Kimley-Horn and Associates, Inc. shall be without liability to Kimley-Horn and Associates, Inc.

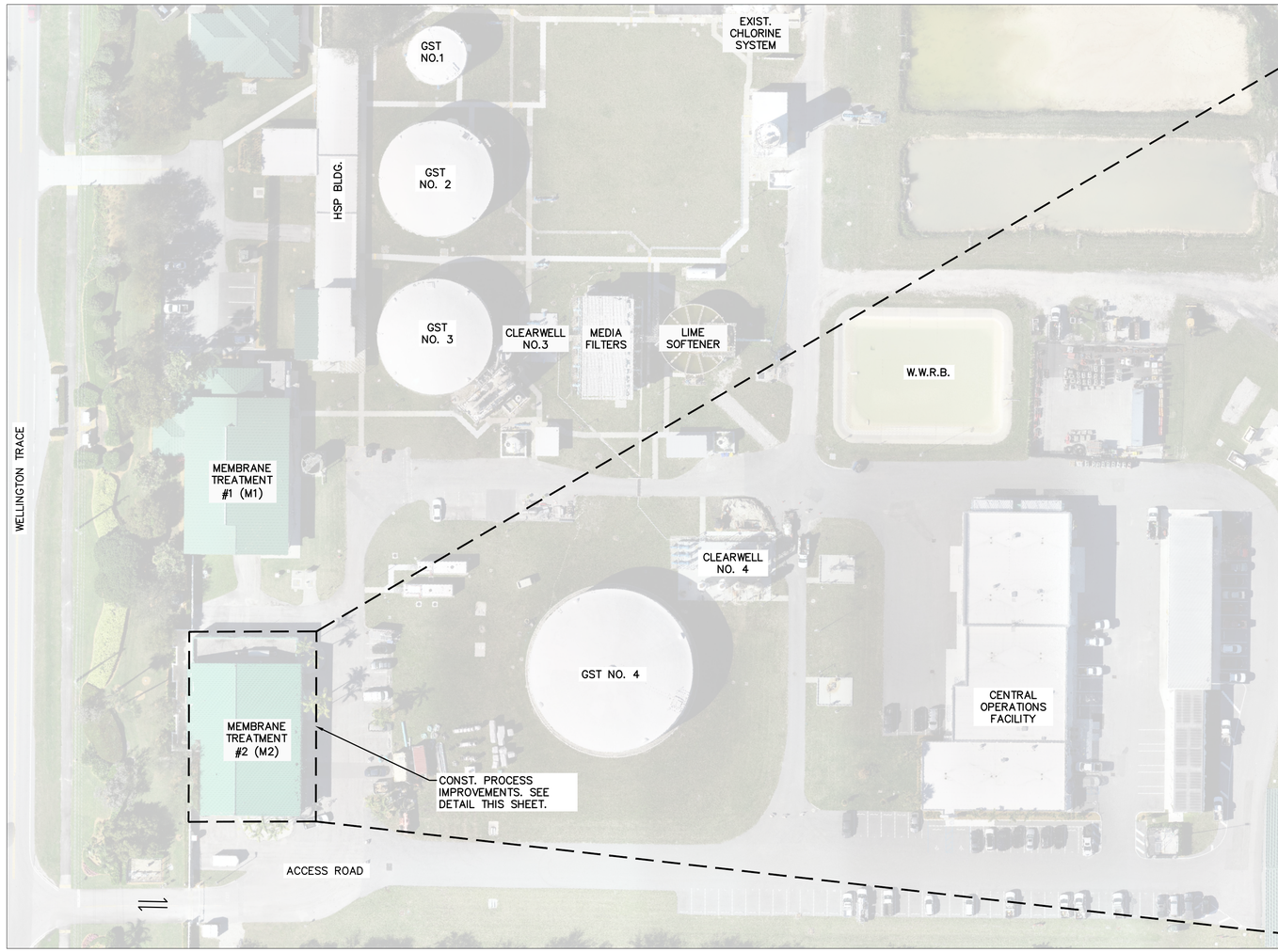

SITE KEY MAP

SCALE: 1" = 50'

GRAPHIC SCALE IN FEET 0 25 50 100

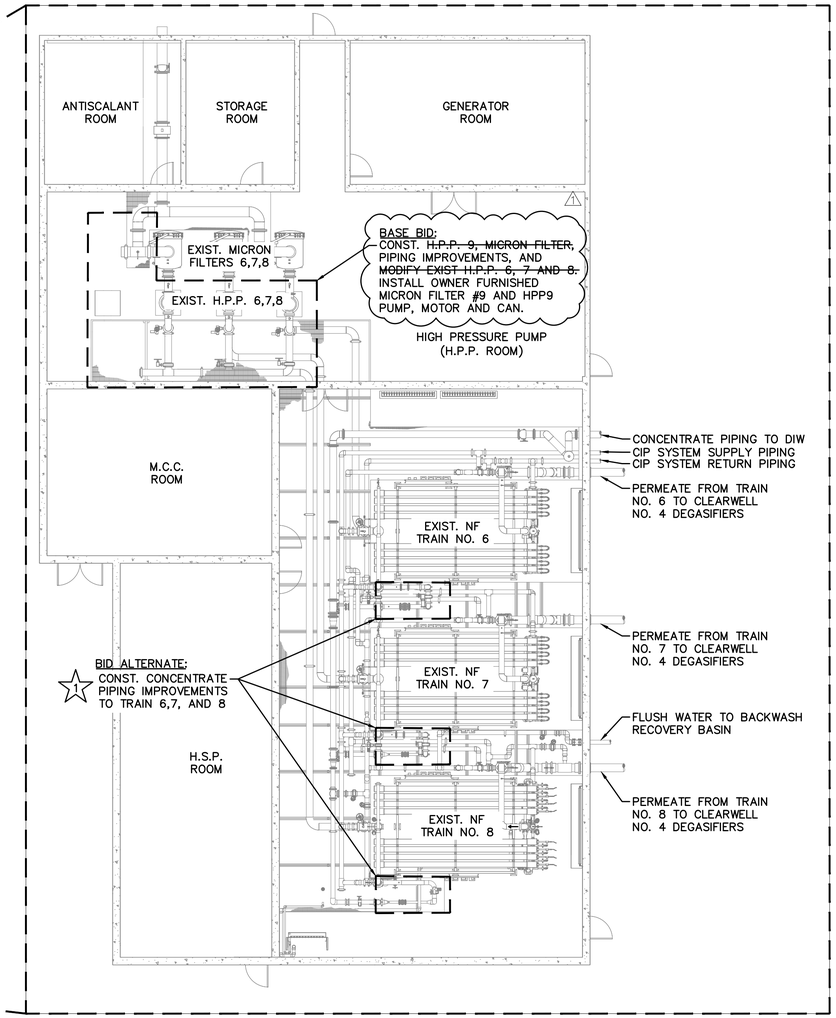

PROCESS AREA PLAN

SCALE: 1" = 10'

GRAPHIC SCALE IN FEET 0 5 10 20

GENERAL NOTES:

1. CONTRACTOR SHALL COORDINATE WORK WITH THE OWNER AND PROVIDE ONE WEEK NOTICE PRIOR TO DEMOLITION.
2. CONTRACTOR SHALL CONFIRM SIZE, MATERIAL, AND LOCATION OF ALL MECHANICAL EQUIPMENT AND FIELD VERIFY EXISTING CONDITIONS AND DIMENSIONS TO ACCOMMODATE PROPOSED EQUIPMENT AS REQUIRED.
3. THE TYPE, SIZE, AND MATERIAL OF M2 PROCESS PIPING AND FITTINGS IS INDICATED ON THE DRAWINGS. IF NOT INDICATED OR WHERE PIPING OR FITTINGS OF DIFFERING SIZE, MATERIAL, OR RATING ARE IDENTIFIED IN THE FIELD AND ARE TO BE CONNECTED (NEW OR EXISTING), THE CONTRACTOR SHALL SUPPLY AND INSTALL ALL NECESSARY FITTINGS, TRANSITIONS, AND OR ADAPTORS TO FACILITATE EXISTING AND OR PROPOSED CONNECTIONS. THE MATERIAL AND PRESSURE RATING SHALL BE CONSISTENT WITH PROCESS PIPING TO WHICH THESE ARE CONNECTED AND SUBJECT TO OWNER'S APPROVAL. 1
4. ALL STAINLESS STEEL PIPING AND FITTINGS SHALL BE FINAL PICKLED AND PASSIVATED U.O.N, WELDED 316/316L SCHEDULE 10S MINIMUM. ~~ALL STAINLESS STEEL PIPING AND FITTING ABOVE THE PIPE TRENCH SHALL ALSO BE ELECTROPOLISHED.~~
5. CONTRACTOR SHALL VERIFY ALL DIMENSIONS PRIOR TO ORDERING MATERIALS AND CONSTRUCTION.
6. CONTRACTOR SHALL FIELD LOCATE EXISTING UTILITIES AND SHALL PROTECT AND MAINTAIN THE INTEGRITY OF ANY AND ALL EXISTING UNDERGROUND UTILITIES. THE CONTRACTOR WILL BE RESPONSIBLE FOR ANY AND ALL DAMAGES DUE TO CONTRACTOR'S FAILURE TO EXACTLY LOCATE AND PRESERVE EXISTING UTILITIES. CONTRACTOR WILL BE REQUIRED TO REPAIR/REPLACE ANY DAMAGED UTILITIES TO OWNERS SATISFACTION.
7. ALL AREAS IMPACTED BY CONSTRUCTION SHALL BE RESTORED PER SPECIFICATIONS.
8. ELEVATION SHOWN HEREIN REFERENCE TO NGVD'29. CONVERSION FROM NGVD 1929 TO NAVD 1988 IS AS FOLLOWS: (NGVD 1929) – 1.471 = (NAVD 1988) 1
9. ONLY ONE NF TRAIN MAY BE TAKEN OFF-LINE AT ANY GIVEN TIME. WORK MUST BE COMPLETED AND ACCEPTED BY OWNER PRIOR TO COMMENCING WORK ON SUBSEQUENT NF TRAIN OR HIGH PRESSURE PUMP.

LEGEND AND ABBREVIATIONS:

BFV	BUTTERFLY VALVE	MIN.	MINIMUM
CL, ℄	CENTERLINE	NFC	NANOFILTRATION CONCENTRATE
CONST.	CONTRUCT	NFF	NANOFILTRATION FEEDWATER
CFV	CARTRIDGE FILTER VESSEL	NFI	NANOFILTRATION INTERSTAGE
CSR	CLEANING SYSTEM RETURN	NFP	NANOFILTRATION PERMEATE
CSS	CLEANING SYSTEM SUPPLY	O.C.	ON CENTER
CSW	CLEANING SYSTEM WASTE	SL	SAMPLE LINE
LS	LUG STYLE	SST	STAINLESS STEEL
LR	LONG RADIUS	T.O.	TOP OF
		VSF	VANSTONE FLANGE

BID ALTERNATE WORK

CONFORMED SET

No.	REVISIONS	DATE	BY
1	CONTRACT MODIFICATIONS	10/16/24	NPOB

Kimley»Horn

© 2025 KIMLEY-HORN AND ASSOCIATES, INC.
1920 WEKIVA WAY SUITE 200, WEST PALM BEACH, FL 33411
PHONE: 561-845-0665 FAX: 561-863-8175
WWW.KIMLEY-HORN.COM REGISTRY NO. 696

KHA PROJECT 144957081
DATE MAY 2025
SCALE AS SHOWN
DESIGNED BY NPOB
DRAWN BY DC
CHECKED BY NPOB

HIGH PRESSURE PUMP NO. 9 IMPROVEMENTS

PREPARED FOR

VILLAGE OF WELLINGTON

PALM BEACH COUNTY FLORIDA

NICHOLAS PETER OLEISKY BLACK LICENSE No 84908 STATE OF FLORIDA PROFESSIONAL ENGINEER

THIS ITEM HAS BEEN DIGITALLY SIGNED AND SEALED BY ON THE DATE ADJACENT TO THE SEAL. THE SIGNATURE MUST BE VERIFIED ON ANY ELECTRONIC COPIES.

SITE KEY MAP, PROCESS AREA PLAN AND GENERAL NOTES

SHEET NUMBER G-2

2 OF 21

Plotted By:Corey, Donur Sheet Set:VWB JBPB Layout:G-2 SITE KEY MAP PROCESS AREA PLAN AND GENERAL NOTES April 30, 2025 08:37:07am a:\WPB_Civil\144957081 - JBPB\CAD\Plansheets\G-2 SITE KEY MAP, PROCESS AREA PLAN AND GENERAL NOTES.dwg
This document, together with the concepts and designs presented herein, as an instrument of service, is intended only for the specific purpose and client for which it was prepared. Reuse of and improper reliance on this document without written authorization and adaptation by Kimley-Horn and Associates, Inc. shall be without liability to Kimley-Horn and Associates, Inc.

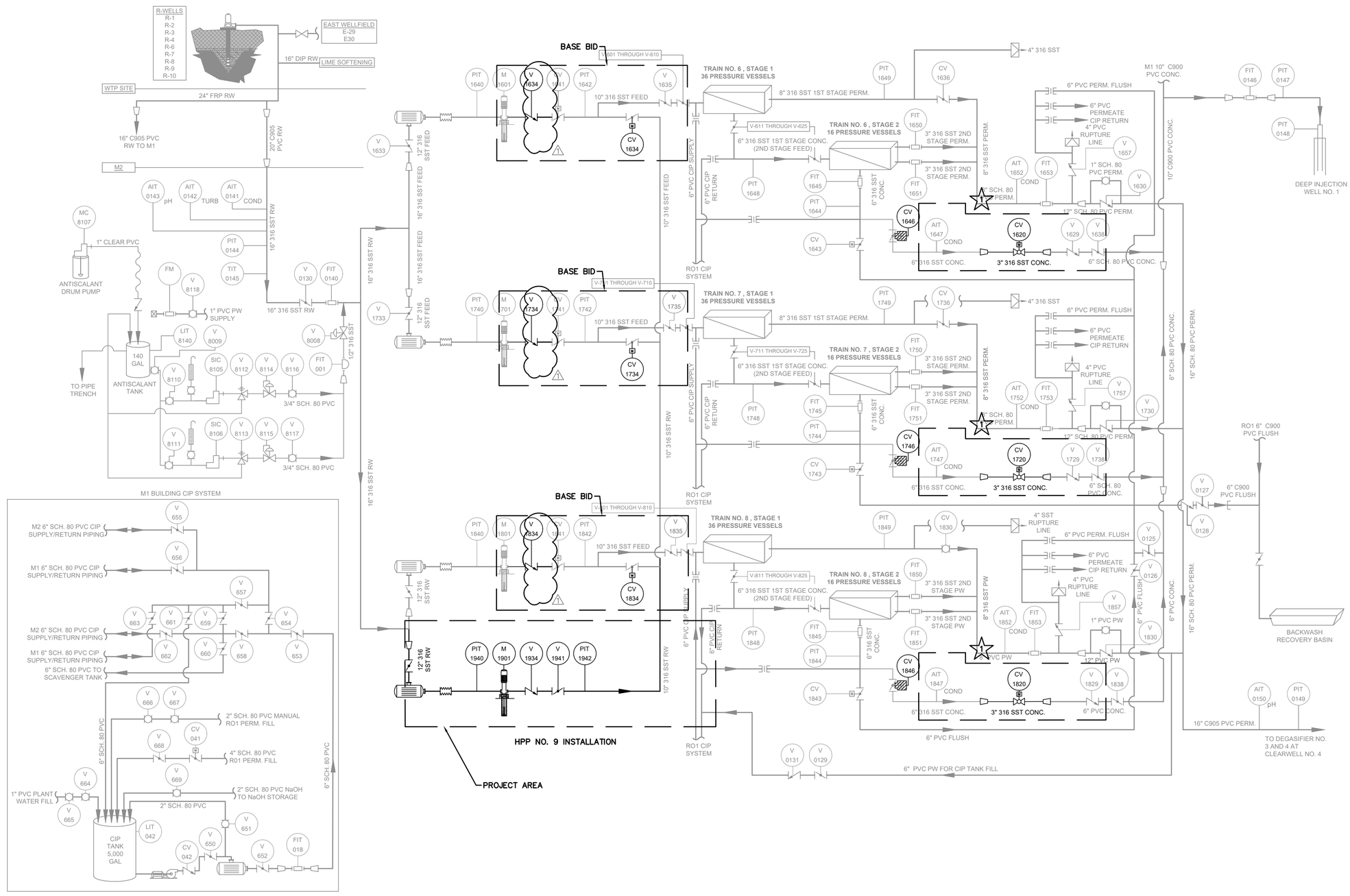

LEGEND:

PROPOSED IMPROVEMENTS

EXISTING ELEMENTS

BID ALTERNATE ITEM #1

* ~~CONTRACTOR SHALL INCLUDE IN THEIR BID PRICE TO MODIFY H.P.P. 6, 7 AND 8. CONTRACTOR SHALL USE AFTON PUMPS TO COMPLETE AND CERTIFY WORK. REFER TO SPECIFICATIONS.~~

CONFORMED SET

No.	REVISIONS	DATE	BY
1	CONTRACT MODIFICATIONS	10/16/24	NPOB

Kimley»Horn

© 2025 KIMLEY-HORN AND ASSOCIATES, INC.
1920 WEKIVA WAY SUITE 200, WEST PALM BEACH, FL 33411
PHONE: 561-845-0665 FAX: 561-863-8175
WWW.KIMLEY-HORN.COM REGISTRY NO. 696

KHA PROJECT 144957081
DATE OCT 2024
SCALE AS SHOWN
DESIGNED BY NPOB
DRAWN BY DC
CHECKED BY NPOB

HIGH PRESSURE PUMP NO. 9 IMPROVEMENTS

PREPARED FOR

VILLAGE OF WELLINGTON

PALM BEACH COUNTY FLORIDA

NICHOLAS PETER OLEISKY BLACK
LICENSE No 84908
STATE OF FLORIDA
PROFESSIONAL ENGINEER

THIS ITEM HAS BEEN DIGITALLY SIGNED AND SEALED BY ON THE DATE ADJACENT TO THE SEAL. THE SIGNATURE MUST BE VERIFIED ON ANY ELECTRONIC COPIES.

PROCESS FLOW DIAGRAM

SHEET NUMBER

G-3

OF 21

Printed By: Oleisky, Black Date: April 30, 2025 08:31 Mon A:\NPB Docs\144957081 - WPB\CAD\Permanent\G-3 PROCESS Flow Diagram.dwg
This document, together with the concepts and designs presented herein, as an instrument of service, is intended only for the specific purpose and client for which it was prepared. Reuse of and improper reliance on this document without written authorization and adaptation by Kimley-Horn and Associates, Inc. shall be without liability to Kimley-Horn and Associates, Inc.

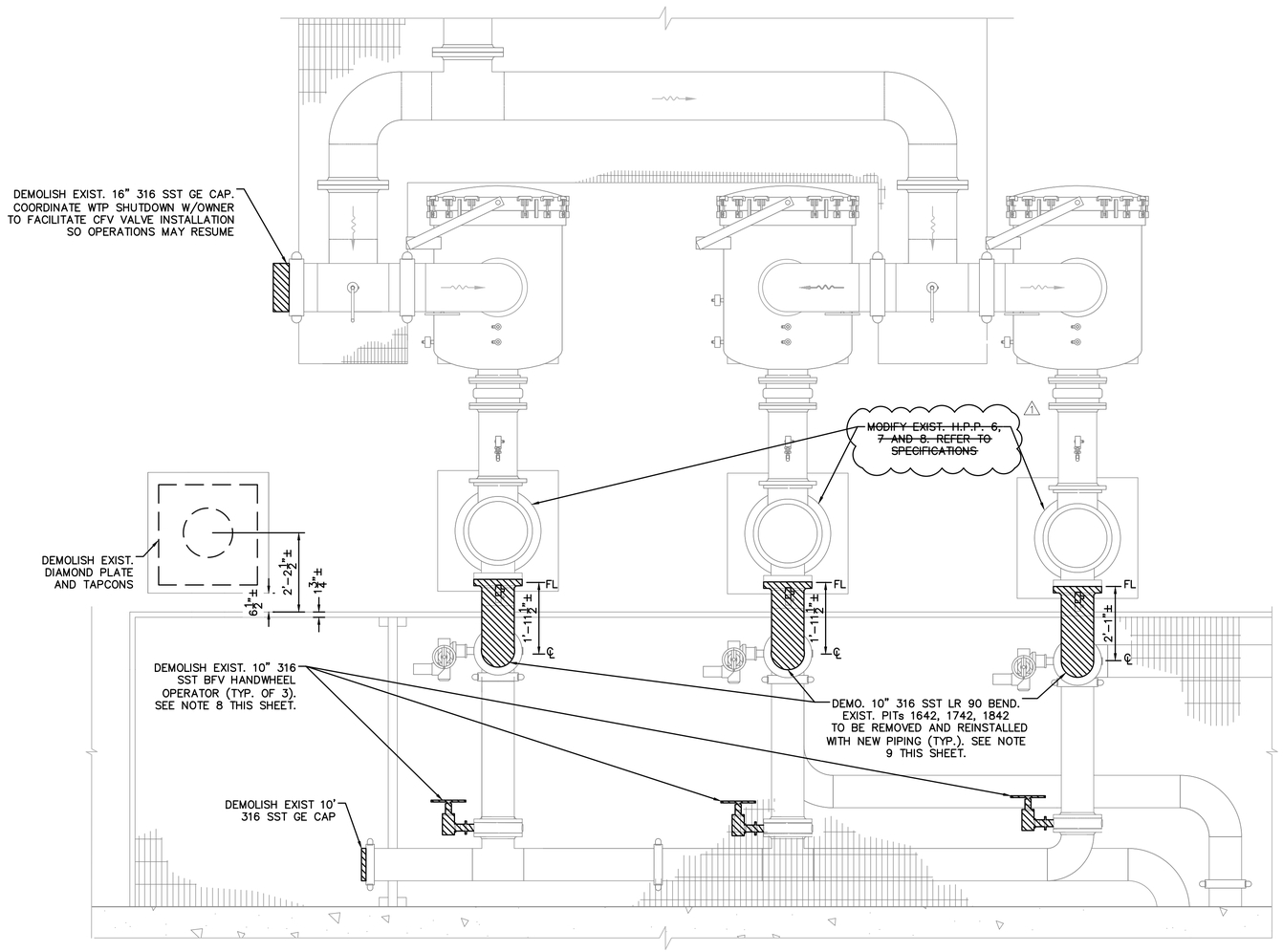

M2 H.P.P. ROOM DEMOLITION PLAN

24x36 SHEET SIZE: 1/2"= 1'-0"
11x17 SHEET SIZE: 1/4"= 1'-0"

0 1 2 3
SCALE FEET

NORTH

GENERAL NOTES:

1. CONTRACTOR SHALL FIELD VERIFY ALL DIMENSIONS.
2. ALL PIPING SHALL BE SCH. 10 316 SST, U.O.N. ALL GROOVES SHALL BE SCH. 40 CUT GROOVES
3. CONTRACTOR SHALL COORDINATE WORK WITH THE OWNER AND PROVIDE 48–HOURS NOTICE PRIOR TO DEMOLITION.
4. CONTRACTOR SHALL FIELD LOCATE EXISTING PIPING, EQUIPMENT, AND STRUCTURAL/SUPPORT COMPONENTS AND SHALL PROTECT AND MAINTAIN THE INTEGRITY OF ANY AND ALL EXISTING PIPING, EQUIPMENT, AND STRUCTURAL/SUPPORT COMPONENTS. THE CONTRACTOR WILL BE RESPONSIBLE FOR ANY AND ALL DAMAGES DUE TO CONTRACTOR'S FAILURE TO EXACTLY LOCATE AND PRESERVE EXISTING COMPONENTS. CONTRACTOR WILL BE REQUIRED TO REPAIR/REPLACE ANY DAMAGED COMPONENTS TO OWNERS SATISFACTION.
5. ALL AREAS IMPACTED BY CONSTRUCTION SHALL BE RESTORED PER SPECIFICATIONS.
6. COORDINATE WITH THE OWNER AND ENGINEER FOR ITEMS TO BE RETURNED AFTER DEMOLITION. THE OWNER RESERVES THE RIGHT TO DESIGNATE ANY ITEMS FOR SALVAGE PER SPECIFICATION SECTION 02065. ALL MATERIALS TO BE DEMOLISHED ARE TO BE DISPOSED OF LEGALLY OFF–SITE.
7. ALL STAINLESS STEEL PIPING AND FITTINGS SHALL BE FINAL PICKLED AND PASSIVATED U.O.N, WELDED 316/316L SCHEDULE 10S MINIMUM. ~~ALL STAINLESS STEEL PIPING AND FITTINGS ABOVE THE PIPE TRENCH SHALL ALSO BE ELECTROPOLISHED.~~ 1
8. EXIST. DISCHARGE VALVES TO BE ROTATED 90° TO ALLOW FOR INSTALLATION OF ACTUATOR AND STEM EXTENSION. GRATING PENETRATION SHALL BE CUT AND BANDED FOR ACTUATOR TO BE INSTALLED ABOVE TRENCH.
9. CONTRACTOR IS PERMITTED TO MODIFY EXIST. 10" 90° BENDS FOR RE–USE. FITTINGS SHALL BE RE–WELDED BY CERTIFIED WELDER. FITTINGS SHALL BE PICKLED AND PASSIVATED, ~~ELECTROPOLISHED~~ PRIOR TO RE–INSTALL. WELDED BOSSES SHALL BE PROVIDED FOR RE–INSTALLATION OF GAUGE ASSEMBLIES. 1

CONFORMED SET

No.	REVISIONS	DATE	BY
1	CONTRACT MODIFICATIONS	10/16/24	NPOB

Kimley»Horn

© 2025 KIMLEY–HORN AND ASSOCIATES, INC.
1920 WEKIVA WAY SUITE 200, WEST PALM BEACH, FL 33411
PHONE: 561–845–0665 FAX: 561–863–8175
WWW.KIMLEY–HORN.COM REGISTRY NO. 696

KHA PROJECT 144957081
DATE MAY 2025
SCALE AS SHOWN
DESIGNED BY NPOB
DRAWN BY DC
CHECKED BY NPOB

HIGH PRESSURE PUMP NO. 9 IMPROVEMENTS
PREPARED FOR
VILLAGE OF WELLINGTON
PALM BEACH COUNTY FLORIDA

NICHOLAS PETER OLEISKY, BLACK
LICENSE No 84908
STATE OF FLORIDA
PROFESSIONAL ENGINEER

THIS ITEM HAS BEEN DIGITALLY SIGNED AND SEALED BY
ON THE DATE ADJACENT TO THE SEAL.
THE SIGNATURE MUST BE VERIFIED ON ANY ELECTRONIC COPIES.

HPP ROOM DEMOLITION PLAN AND SECTIONS

SHEET NUMBER
M-1
4 OF 21

Printed By:Conu, Donal Sheet Set:VOB JBP9 Layout:M-1 HPP ROOM DEMOLITION PLAN AND SECTIONS Aug 30, 2025 08:37:32am K:\WPB-Civil\144957081 - HPP9\CAD\Parasheets\M-1 HPP ROOM DEMOLITION PLAN AND SECTIONS.dwg
This document, together with the concepts and designs presented herein, as an instrument of service, is intended only for the specific purpose and client for which it was prepared. Reuse of and improper reliance on this document without written authorization and adaptation by Kimley-Horn and Associates, Inc. shall be without liability to Kimley-Horn and Associates, Inc.

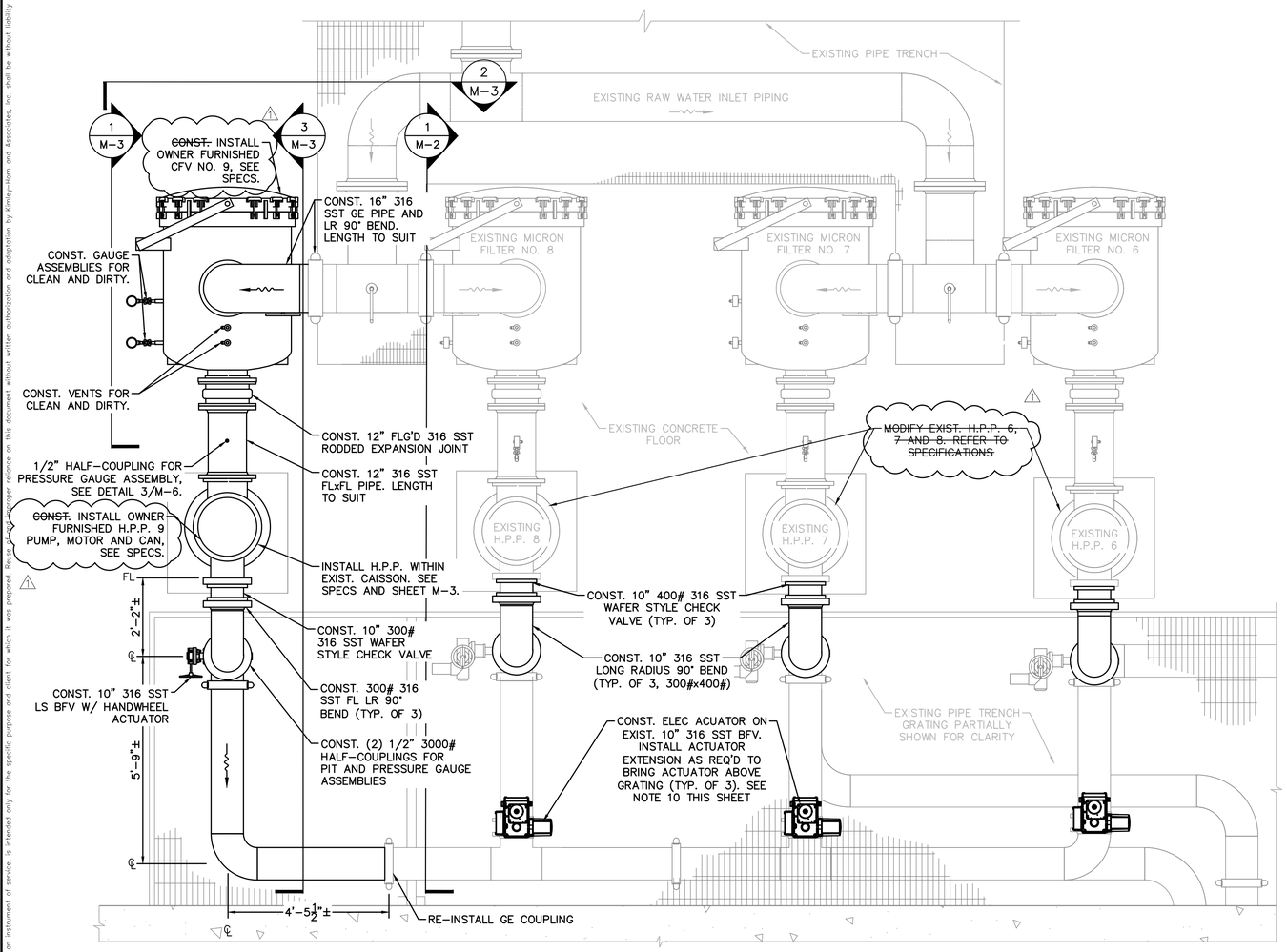

M2 H.P.P. ROOM IMPROVEMENTS PLAN

24x36 SHEET SIZE: ½"= 1'-0"
11x17 SHEET SIZE: ¼"= 1'-0"

0 1 2 3
SCALE FEET

NORTH

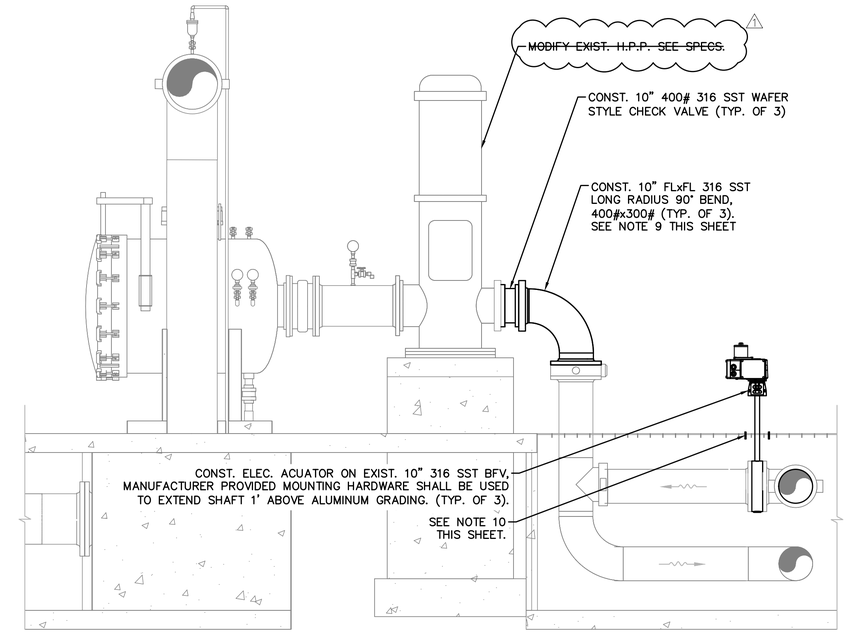

1 / M-2 M2 H.P.P. 6,7, AND 8 IMPROVEMENTS SECTION

24x36 SHEET SIZE: ½"= 1'-0"
11x17 SHEET SIZE: ¼"= 1'-0"

GENERAL NOTES:

1. CONTRACTOR SHALL FIELD VERIFY ALL DIMENSIONS.
2. ALL PIPING SHALL BE SCH. 10 316 SST, U.O.N. ALL GROOVES SHALL BE SCH. 40 CUT GROOVES
3. CONTRACTOR SHALL COORDINATE WORK WITH THE OWNER AND PROVIDE 48-HOURS NOTICE PRIOR TO DEMOLITION.
4. CONTRACTOR SHALL FIELD LOCATE EXISTING PIPING, EQUIPMENT, AND STRUCTURAL/SUPPORT COMPONENTS AND SHALL PROTECT AND MAINTAIN THE INTEGRITY OF ANY AND ALL EXISTING PIPING, EQUIPMENT, AND STRUCTURAL/SUPPORT COMPONENTS. THE CONTRACTOR WILL BE RESPONSIBLE FOR ANY AND ALL DAMAGES DUE TO CONTRACTOR'S FAILURE TO EXACTLY LOCATE AND PRESERVE EXISTING COMPONENTS. CONTRACTOR WILL BE REQUIRED TO REPAIR/REPLACE ANY DAMAGED COMPONENTS TO OWNERS SATISFACTION.
5. ALL AREAS IMPACTED BY CONSTRUCTION SHALL BE RESTORED PER SPECIFICATIONS.
6. COORDINATE WITH THE OWNER AND ENGINEER FOR ITEMS TO BE RETURNED AFTER DEMOLITION. THE OWNER RESERVES THE RIGHT TO DESIGNATE ANY ITEMS FOR SALVAGE PER SPECIFICATION SECTION 02065. ALL MATERIALS TO BE DEMOLISHED ARE TO BE DISPOSED OF LEGALLY OFF-SITE.
7. ALL STAINLESS STEEL PIPING AND FITTINGS SHALL BE FINAL PICKLED AND PASSIVATED U.O.N, WELDED 316/316L SCHEDULE 10S MINIMUM. ~~ALL STAINLESS STEEL PIPING AND FITTING ABOVE THE PIPE TRENCH SHALL ALSO BE ELECTROPOLISHED.~~
8. EXIST. DISCHARGE VALVES TO BE ROTATED 90° TO ALLOW FOR INSTALLATION OF ACTUATOR AND STEM EXTENSION. GRATING PENETRATION SHALL BE CUT AND BANDED FOR ACTUATOR TO BE INSTALLED ABOVE TRENCH.
9. CONTRACTOR IS PERMITTED TO MODIFY EXIST. 10" 90° BENDS FOR RE-USE. FITTINGS SHALL BE RE-WELDED BY CERTIFIED WELDER. FITTINGS SHALL BE PICKLED AND PASSIVATED, ~~ELECTROPOLISHED~~ PRIOR TO RE-INSTALL. WELDED BOSSES SHALL BE PROVIDED FOR RE-INSTALLATION OF GAUGE ASSEMBLIES.
10. CUT AND PENETRATE ALUMINUM GRATING AS REQUIRED TO ACCOMMODATE INSTALLATION. BAND NEW OPENINGS AT PENETRATIONS. COORDINATE WITH OWNER AND ENGINEER.
11. FLANGES SHALL BE ANSI 150#, U.O.N.

CONFORMED SET

No.	REVISIONS	DATE	BY
1	CONTRACT MODIFICATIONS	10/16/24	NPOB

Kimley»Horn

© 2025 KIMLEY-HORN AND ASSOCIATES, INC.
1920 WEKIVA WAY SUITE 200, WEST PALM BEACH, FL 33411
PHONE: 561-845-0665 FAX: 561-863-8175
WWW.KIMLEY-HORN.COM REGISTRY NO. 696

KHA PROJECT 144957081
DATE MAY 2025
SCALE AS SHOWN
DESIGNED BY NPOB
DRAWN BY DC
CHECKED BY NPOB

HIGH PRESSURE PUMP NO. 9 IMPROVEMENTS

PREPARED FOR

VILLAGE OF WELLINGTON

PALM BEACH COUNTY FLORIDA

NICHOLAS PETER OLEISKY BECK LICENSE No 84908 STATE OF FLORIDA PROFESSIONAL ENGINEER

THIS ITEM HAS BEEN DIGITALLY SIGNED AND SEALED BY ON THE DATE ADJACENT TO THE SEAL. THE SIGNATURE MUST BE VERIFIED ON ANY ELECTRONIC COPIES.

HPP ROOM PROPOSED PLAN AND SECTIONS

SHEET NUMBER

M-2

5 OF 21

Plotted By:Conu, Danur Sheet Set:VOW HPP9 Layout:M-2 HPP ROOM PROPOSED PLAN AND SECTIONS April 30, 2025 08:37:54am K:\WPB-Civil\144957081 - HPP9\CAD\Prototypes\M-2 HPP ROOM PROPOSED PLAN AND SECTIONS.dwg
This document, together with the concepts and designs presented herein, as an instrument of service, is intended only for the specific purpose and client for which it was prepared. Reuse of and improper reliance on this document without written authorization and adaptation by Kimley-Horn and Associates, Inc. shall be without liability to Kimley-Horn and Associates, Inc.

GENERAL NOTES:

1. CONTRACTOR SHALL FIELD VERIFY ALL DIMENSIONS.
2. ALL PIPING SHALL BE SCH. 10 316 SST, U.O.N. ALL GROOVES SHALL BE SCH. 40 CUT GROOVES
3. CONTRACTOR SHALL COORDINATE WORK WITH THE OWNER AND PROVIDE 48–HOURS NOTICE PRIOR TO DEMOLITION.
4. CONTRACTOR SHALL FIELD LOCATE EXISTING PIPING, EQUIPMENT, AND STRUCTURAL/SUPPORT COMPONENTS AND SHALL PROTECT AND MAINTAIN THE INTEGRITY OF ANY AND ALL EXISTING PIPING, EQUIPMENT, AND STRUCTURAL/SUPPORT COMPONENTS. THE CONTRACTOR WILL BE RESPONSIBLE FOR ANY AND ALL DAMAGES DUE TO CONTRACTOR'S FAILURE TO EXACTLY LOCATE AND PRESERVE EXISTING COMPONENTS. CONTRACTOR WILL BE REQUIRED TO REPAIR/REPLACE ANY DAMAGED COMPONENTS TO OWNERS SATISFACTION.
5. ALL AREAS IMPACTED BY CONSTRUCTION SHALL BE RESTORED PER SPECIFICATIONS.
6. ALL BUTTERFLY VALVES ARE TO BE INSTALLED WITH THE SHAFT IN THE SAME PLANE, OR PARALLEL, WITH ANY BEND IN THE PIPE ATTACHED TO EITHER SIDE OF THE VALVE. A TEE IS CONSIDERED A BEND.
7. CUT AND PENETRATE ALUMINUM GRATING AS REQUIRED TO ACCOMMODATE INSTALLATION. BAND NEW OPENINGS AT PENETRATIONS. COORDINATE WITH OWNER AND ENGINEER.

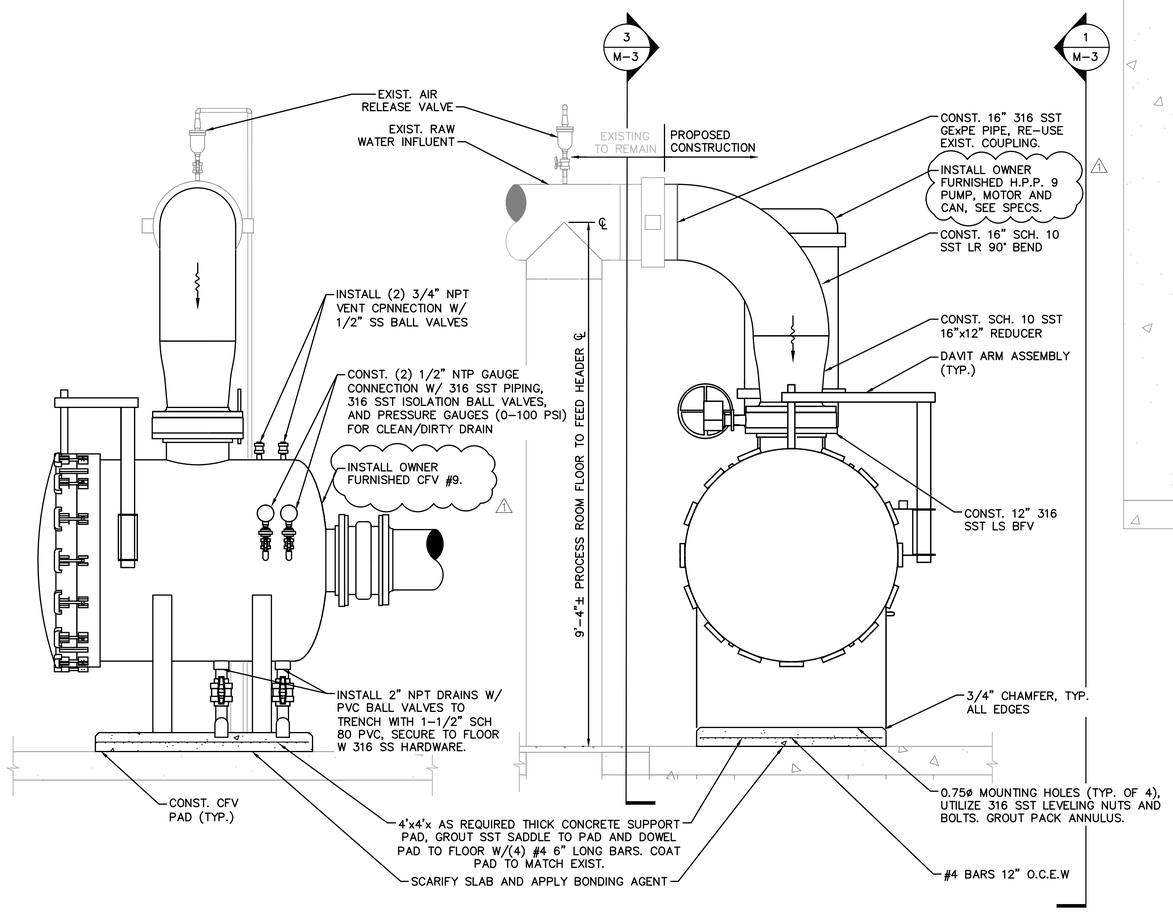

1 M-3 H.P.P. 9 MICRON FILTER - SECTION 1

24x36 SHEET SIZE: 3/4"= 1'–0"
11x17 SHEET SIZE: 3/8"= 1'–0"

2 M-3 H.P.P. 9 MICRON FILTER - SECTION 2

24x36 SHEET SIZE: 3/4"= 1'–0"
11x17 SHEET SIZE: 3/8"= 1'–0"

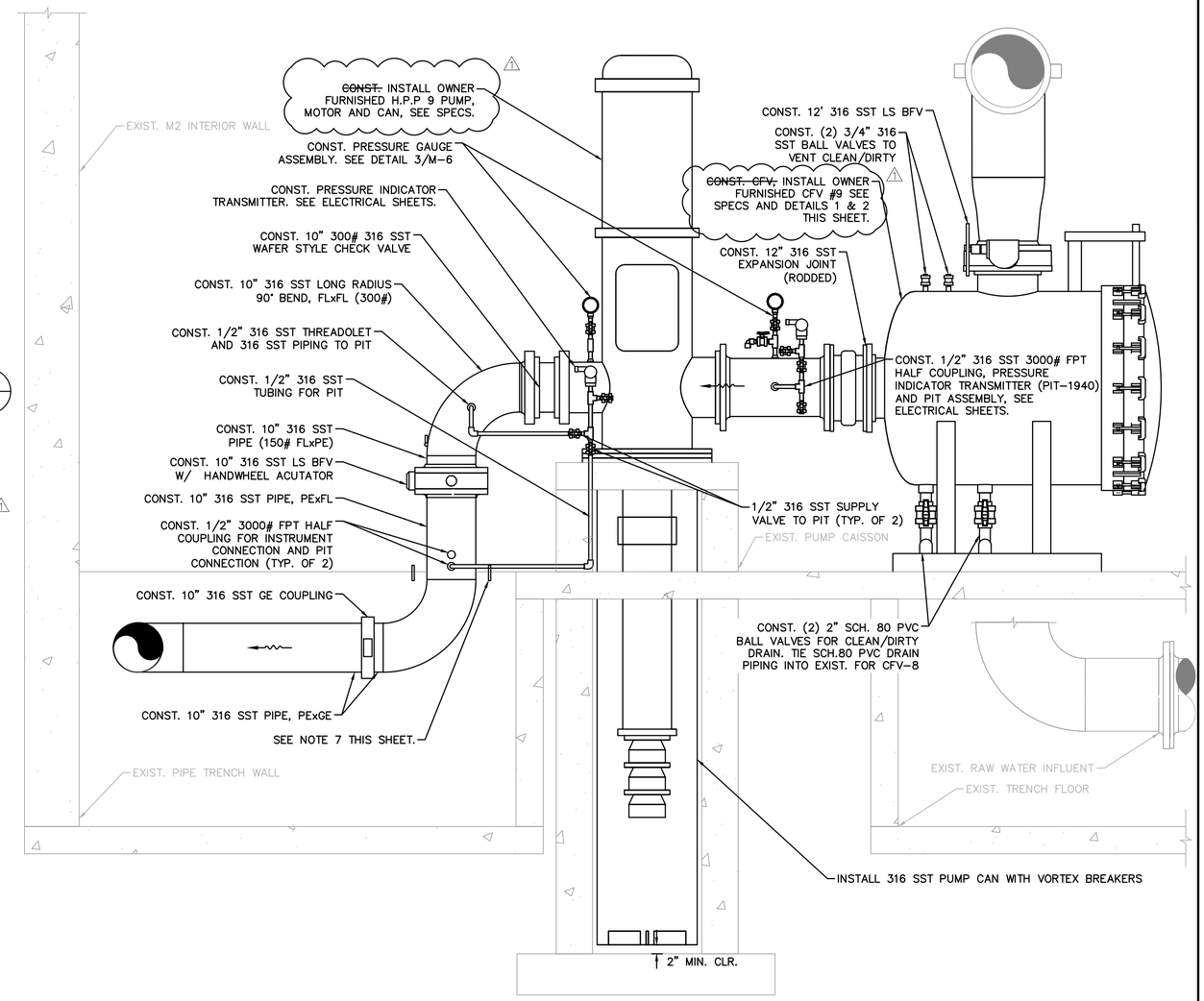

3 M-3 H.P.P. 9 - SECTION 3

24x36 SHEET SIZE: 3/4"= 1'–0"
11x17 SHEET SIZE: 3/8"= 1'–0"

0 1 2
SCALE FEET

CONFORMED SET

No.	REVISIONS	DATE	BY
1	CONTRACT MODIFICATIONS	10/16/24	NPOB

Kimley»Horn

© 2025 KIMLEY–HORN AND ASSOCIATES, INC.
1920 WEKIVA WAY SUITE 200, WEST PALM BEACH, FL 33411
PHONE: 561–845–0665 FAX: 561–863–8175
WWW.KIMLEY–HORN.COM REGISTRY NO. 696

KHA PROJECT 144957081
DATE MAY 2025
SCALE AS SHOWN
DESIGNED BY NPOB
DRAWN BY DC
CHECKED BY NPOB

HIGH PRESSURE PUMP NO. 9 IMPROVEMENTS

PREPARED FOR

VILLAGE OF WELLINGTON

PALM BEACH COUNTY FLORIDA

NICHOLAS PETER OLEISKY BLACK
LICENSE
No 84908
STATE OF FLORIDA
PROFESSIONAL ENGINEER

THIS ITEM HAS BEEN DIGITALLY SIGNED AND SEALED BY

ON THE DATE ADJACENT TO THE SEAL.
THE SIGNATURE MUST BE VERIFIED ON ANY ELECTRONIC COPIES.

MECHANICAL DETAILS

SHEET NUMBER

M-3

6 OF 21

This document, together with the concepts and designs presented herein, as an instrument of service, is intended only for the specific purpose and client for which it was prepared. Reuse of and improper reliance on this document without written authorization and adaptation by Kimley-Horn and Associates, Inc. shall be without liability to Kimley-Horn and Associates, Inc.

Plotted By:Corey, Dorian Sheet Set:VOW (PPP) Layout:M-3 MECHANICAL DETAILS April 30, 2025 08:38:23am u:\WPB_Civil\144957081 - HPPP\CAD\Plansheets\M-3 MECHANICAL DETAILS.dwg

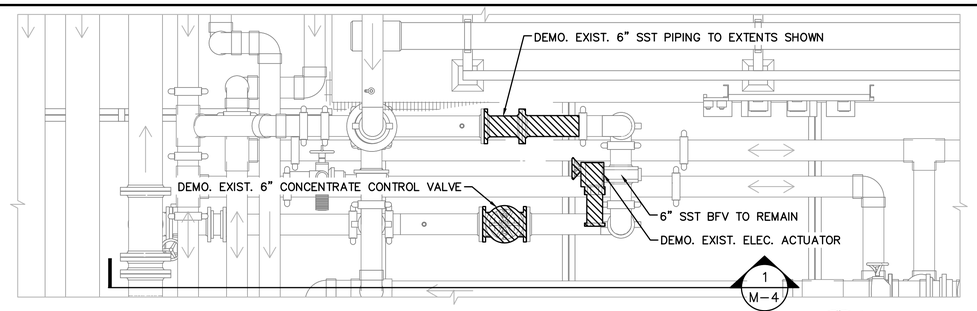

NF TRAIN 6 CONCENTRATE DEMOLITION PLAN

24x36 SHEET SIZE: 1/2"= 1'-0"
11x17 SHEET SIZE: 1/4"= 1'-0"

0 1 2 3
SCALE FEET

NORTH

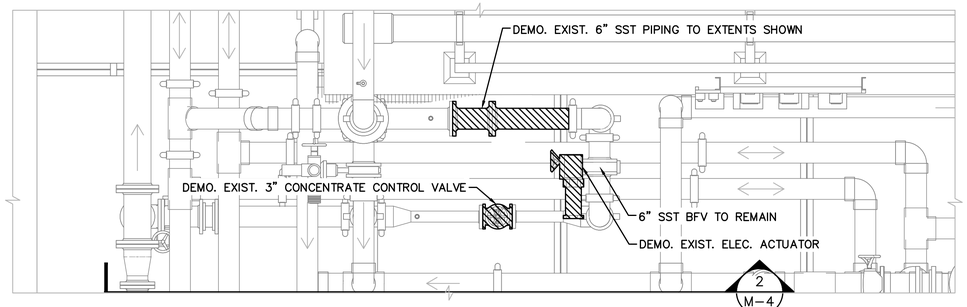

NF TRAIN 7 CONCENTRATE DEMOLITION PLAN

24x36 SHEET SIZE: 1/2"= 1'-0"
11x17 SHEET SIZE: 1/4"= 1'-0"

0 1 2 3
SCALE FEET

NORTH

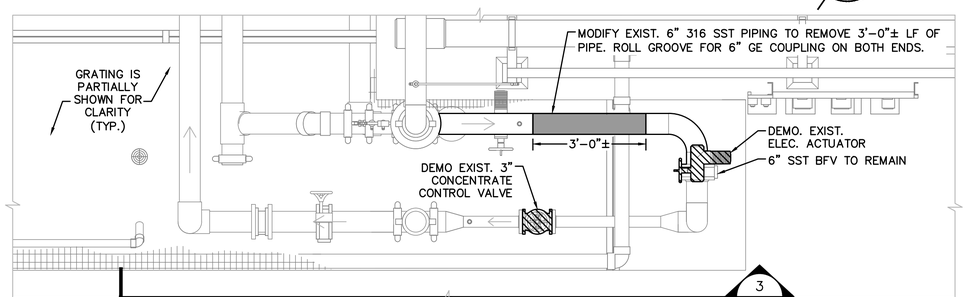

NF TRAIN 8 CONCENTRATE DEMOLITION PLAN

24x36 SHEET SIZE: 1/2"= 1'-0"
11x17 SHEET SIZE: 1/4"= 1'-0"

0 1 2 3
SCALE FEET

NORTH

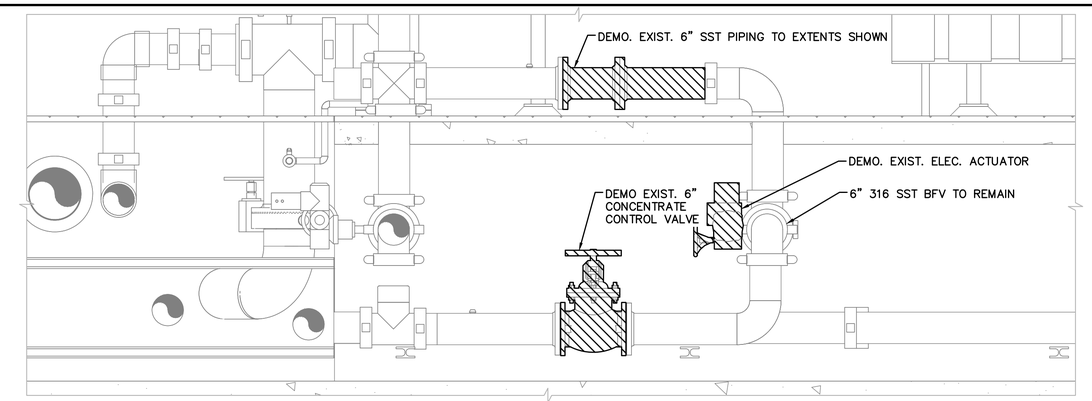

1 M-4 NF TRAIN 6 CONCENTRATE DEMOLITION SECTION

24x36 SHEET SIZE: 3/4"= 1'-0"
11x17 SHEET SIZE: 3/8"= 1'-0"

0 1 2
SCALE FEET

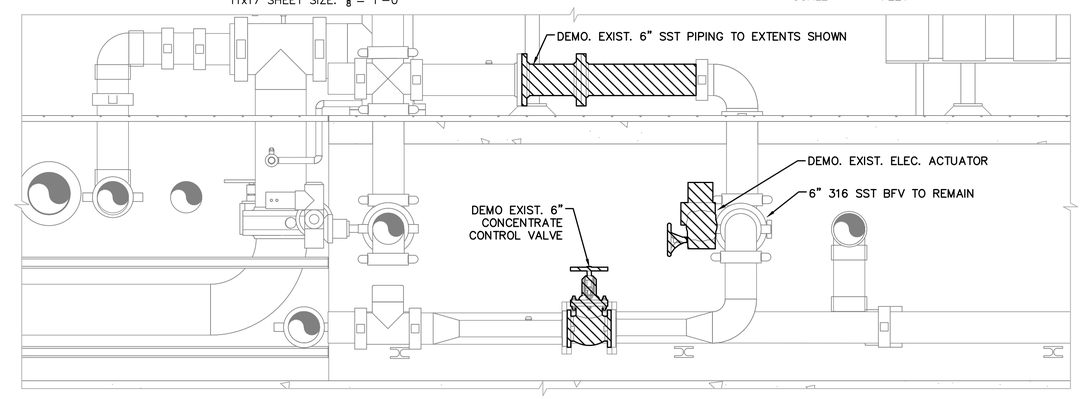

2 M-4 NF TRAIN 7 CONCENTRATE DEMOLITION SECTION

24x36 SHEET SIZE: 3/4"= 1'-0"
11x17 SHEET SIZE: 3/8"= 1'-0"

0 1 2
SCALE FEET

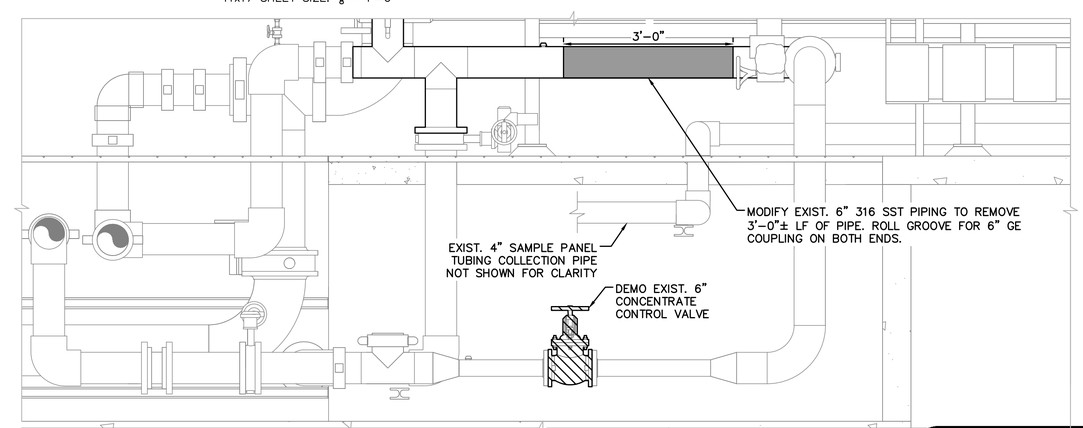

3 M-4 NF TRAIN 8 CONCENTRATE DEMOLITION SECTION

24x36 SHEET SIZE: 3/4"= 1'-0"
11x17 SHEET SIZE: 3/8"= 1'-0"

0 1 2
SCALE FEET

CONFORMED SET

GENERAL NOTES

1. CONTRACTOR SHALL FIELD VERIFY ALL DIMENSIONS.
2. ALL PIPING SHALL BE SCH. 10 316 SST, U.O.N. ALL GROOVES SHALL BE SCH. 40 CUT GROOVES
3. CONTRACTOR SHALL COORDINATE WORK WITH THE OWNER AND PROVIDE 48-HOURS NOTICE PRIOR TO DEMOLITION.
4. CONTRACTOR SHALL FIELD LOCATE EXISTING PIPING, EQUIPMENT, AND STRUCTURAL/SUPPORT COMPONENTS AND SHALL PROTECT AND MAINTAIN THE INTEGRITY OF ANY AND ALL EXISTING PIPING, EQUIPMENT, AND STRUCTURAL/SUPPORT COMPONENTS. THE CONTRACTOR WILL BE RESPONSIBLE FOR ANY AND ALL DAMAGES DUE TO CONTRACTOR'S FAILURE TO EXACTLY LOCATE AND PRESERVE EXISTING COMPONENTS. CONTRACTOR WILL BE REQUIRED TO REPAIR/REPLACE ANY DAMAGED COMPONENTS TO OWNERS SATISFACTION.
5. ALL AREAS IMPACTED BY CONSTRUCTION SHALL BE RESTORED PER SPECIFICATIONS.
6. COORDINATE WITH THE OWNER AND ENGINEER FOR ITEMS TO BE RETURNED AFTER DEMOLITION. THE OWNER RESERVES THE RIGHT TO DESIGNATE ANY ITEMS FOR SALVAGE PER SPECIFICATION SECTION 02050. ALL MATERIALS TO BE DEMOLISHED ARE TO BE DISPOSED OF LEGALLY OFF-SITE.
8. ALL BUTTERFLY VALVES ARE TO BE INSTALLED WITH THE SHAFT IN THE SAME PLANE, OR PARALLEL, WITH ANY BEND IN THE PIPE ATTACHED TO EITHER SIDE OF THE VALVE. A TEE IS CONSIDERED A BEND.

No.	REVISIONS	DATE	BY
1	CONTRACT MODIFICATIONS	10/16/24	NPOB

Kimley»Horn

© 2025 KIMLEY-HORN AND ASSOCIATES, INC.
1920 WEKIVA WAY SUITE 200, WEST PALM BEACH, FL 33411
PHONE: 561-845-0665 FAX: 561-863-8175
WWW.KIMLEY-HORN.COM REGISTRY NO. 696

KHA PROJECT 144957081
DATE MAY 2025
SCALE AS SHOWN
DESIGNED BY NPOB
DRAWN BY DC
CHECKED BY NPOB

HIGH PRESSURE PUMP NO. 9 IMPROVEMENTS

PREPARED FOR

VILLAGE OF WELLINGTON

PALM BEACH COUNTY FLORIDA

NICHOLAS PETER OLEISKI BLACK
LICENSE No 84908
STATE OF FLORIDA
PROFESSIONAL ENGINEER

THIS ITEM HAS BEEN DIGITALLY SIGNED AND SEALED BY

ON THE DATE ADJACENT TO THE SEAL.
THE SIGNATURE MUST BE VERIFIED ON ANY ELECTRONIC COPIES.

NF ROOM DEMOLITION PLAN AND SECTIONS

SHEET NUMBER
M-4
7 OF 21

Plotted By:Corey, Duane Sheet Set:VOW JBPS Layout:M-4 NF ROOM DEMOLITION PLAN AND SECTIONS April 30, 2025 08:38:53am a:\WPB_Civil\144957081 - HPPS\CAD\Plansheets\M-4 NF ROOM DEMOLITION PLAN AND SECTIONS.dwg
This document, together with the concepts and designs presented herein, as an instrument of service, is intended only for the specific purpose and client for which it was prepared. Reuse of and improper reliance on this document without written authorization and adaptation by Kimley-Horn and Associates, Inc. shall be without liability to Kimley-Horn and Associates, Inc.

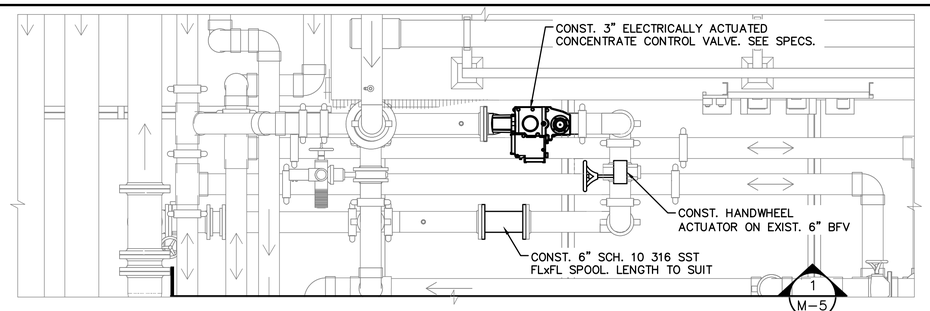

NF TRAIN 6 CONCENTRATE IMPROVEMENTS PLAN

24x36 SHEET SIZE: $\frac{1}{2}$"= 1'-0"
11x17 SHEET SIZE: $\frac{1}{4}$"= 1'-0"

0 1 2 3
SCALE FEET

NORTH

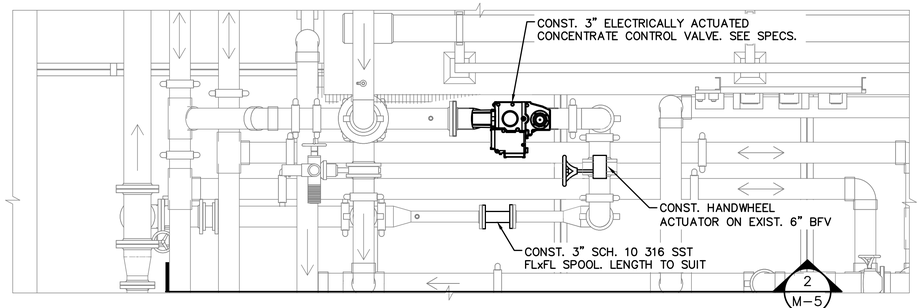

NF TRAIN 6 CONCENTRATE IMPROVEMENTS PLAN

24x36 SHEET SIZE: $\frac{1}{2}$"= 1'-0"
11x17 SHEET SIZE: $\frac{1}{4}$"= 1'-0"

0 1 2 3
SCALE FEET

NORTH

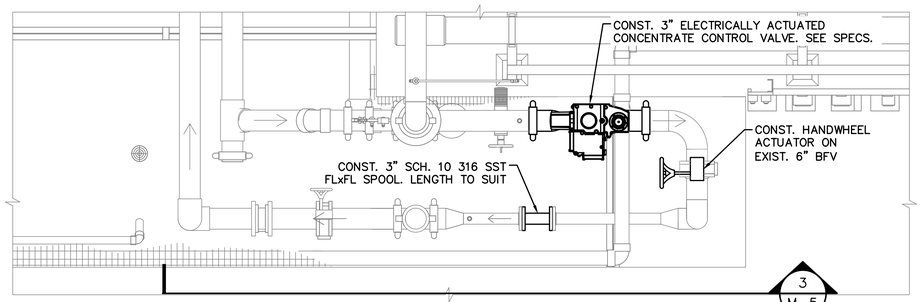

NF TRAIN 8 CONCENTRATE IMPROVEMENTS PLAN

24x36 SHEET SIZE: $\frac{1}{2}$"= 1'-0"
11x17 SHEET SIZE: $\frac{1}{4}$"= 1'-0"

0 1 2 3
SCALE FEET

NORTH

GENERAL NOTES

1. CONTRACTOR SHALL FIELD VERIFY ALL DIMENSIONS.
2. ALL PIPING SHALL BE SCH. 10 316 SST, U.O.N. ALL GROOVES SHALL BE SCH. 40 CUT GROOVES
3. CONTRACTOR SHALL COORDINATE WORK WITH THE OWNER AND PROVIDE 48-HOURS NOTICE PRIOR TO DEMOLITION.
4. CONTRACTOR SHALL FIELD LOCATE EXISTING PIPING, EQUIPMENT, AND STRUCTURAL/SUPPORT COMPONENTS AND SHALL PROTECT AND MAINTAIN THE INTEGRITY OF ANY AND ALL EXISTING PIPING, EQUIPMENT, AND STRUCTURAL/SUPPORT COMPONENTS. THE CONTRACTOR WILL BE RESPONSIBLE FOR ANY AND ALL DAMAGES DUE TO CONTRACTOR'S FAILURE TO EXACTLY LOCATE AND PRESERVE EXISTING COMPONENTS. CONTRACTOR WILL BE REQUIRED TO REPAIR/REPLACE ANY DAMAGED COMPONENTS TO OWNERS SATISFACTION.
5. ALL AREAS IMPACTED BY CONSTRUCTION SHALL BE RESTORED PER SPECIFICATIONS.
6. COORDINATE WITH THE OWNER AND ENGINEER FOR ITEMS TO BE RETURNED AFTER DEMOLITION. THE OWNER RESERVES THE RIGHT TO DESIGNATE ANY ITEMS FOR SALVAGE PER SPECIFICATION SECTION 02050. ALL MATERIALS TO BE DEMOLISHED ARE TO BE DISPOSED OF LEGALLY OFF-SITE.
8. ALL BUTTERFLY VALVES ARE TO BE INSTALLED WITH THE SHAFT IN THE SAME PLANE, OR PARALLEL, WITH ANY BEND IN THE PIPE ATTACHED TO EITHER SIDE OF THE VALVE. A TEE IS CONSIDERED A BEND.

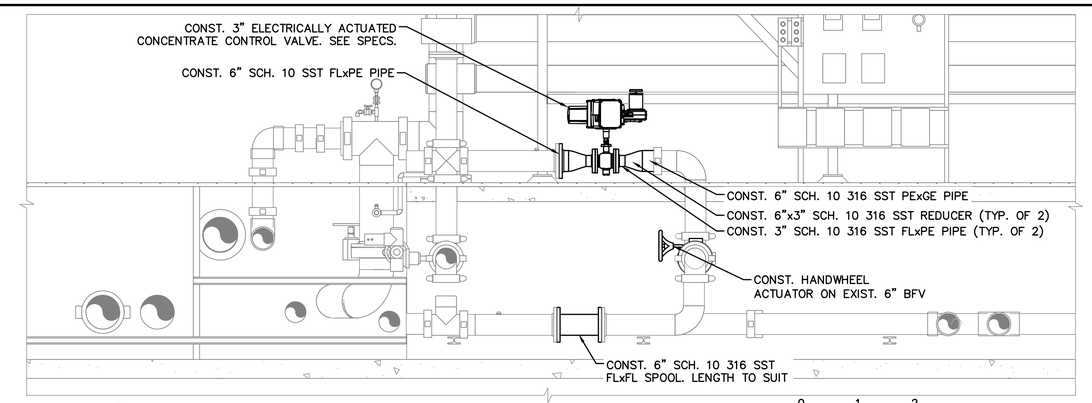

1 M-5 NF TRAIN 6 CONCENTRATE IMPROVEMENTS SECTION

24x36 SHEET SIZE: $\frac{3}{4}$"= 1'-0"
11x17 SHEET SIZE: $\frac{3}{8}$"= 1'-0"

0 1 2
SCALE FEET

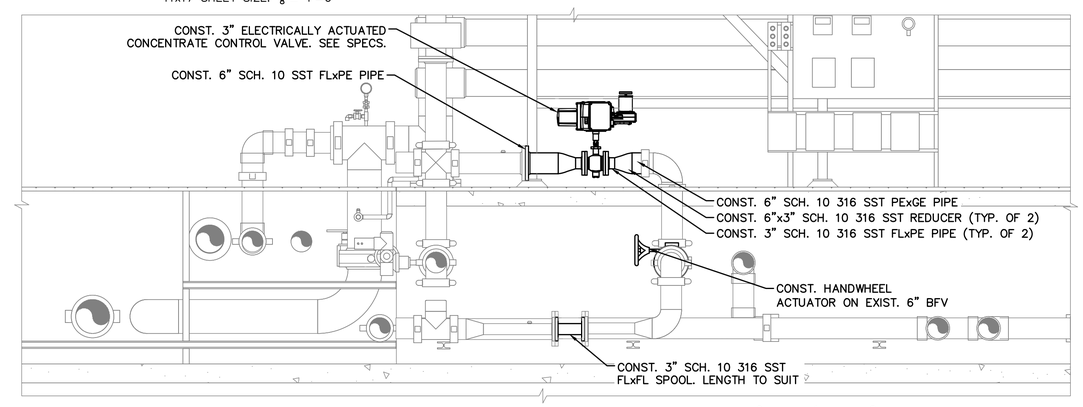

2 M-5 NF TRAIN 7 CONCENTRATE IMPROVEMENTS SECTION

24x36 SHEET SIZE: $\frac{3}{4}$"= 1'-0"
11x17 SHEET SIZE: $\frac{3}{8}$"= 1'-0"

0 1 2
SCALE FEET

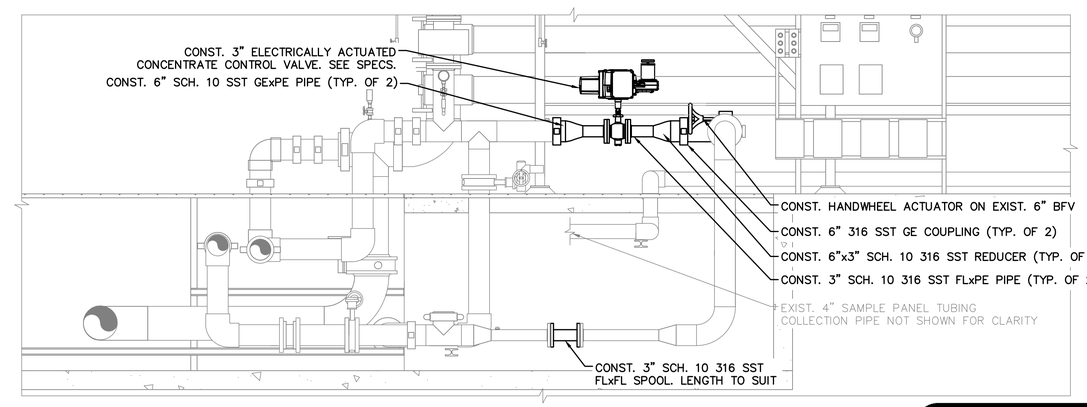

3 M-5 NF TRAIN 8 CONCENTRATE IMPROVEMENTS SECTION

24x36 SHEET SIZE: $\frac{3}{4}$"= 1'-0"
11x17 SHEET SIZE: $\frac{3}{8}$"= 1'-0"

0 1 2
SCALE FEET

CONFORMED SET

No.	REVISIONS	DATE	BY
1	CONTRACT MODIFICATIONS	10/16/24	NPOB

Kimley»Horn

© 2025 KIMLEY-HORN AND ASSOCIATES, INC.
1920 WEKIVA WAY SUITE 200, WEST PALM BEACH, FL 33411
PHONE: 561-845-0665 FAX: 561-863-8175
WWW.KIMLEY-HORN.COM REGISTRY NO. 696

KHA PROJECT 144957081
DATE MAY 2025
SCALE AS SHOWN
DESIGNED BY NPOB
DRAWN BY DC
CHECKED BY NPOB

HIGH PRESSURE PUMP NO. 9 IMPROVEMENTS

PREPARED FOR

VILLAGE OF WELLINGTON

PALM BEACH COUNTY FLORIDA

NICHOLAS PETER OLEISKY BLACK
LICENSE
No 84908
STATE OF FLORIDA
PROFESSIONAL ENGINEER

THIS ITEM HAS BEEN DIGITALLY SIGNED AND SEALED BY

ON THE DATE ADJACENT TO THE SEAL.
THE SIGNATURE MUST BE VERIFIED ON ANY ELECTRONIC COPIES.

NF ROOM PROPOSED PLAN AND SECTIONS

SHEET NUMBER
M-5
8 OF 21

Printed By:Dorin, Daniel Sheet Set:VOW WPB Layout:M-5 NF ROOM PROPOSED PLAN AND SECTIONS April 30, 2025 08:33:41am K:\WPB_Civil\144957081 - WPB\CAD\Plansheets\M-5 NF ROOM PROPOSED PLAN AND SECTIONS.dwg
This document, together with the concepts and designs presented herein, as an instrument of service, is intended only for the specific purpose and client for which it was prepared. Reuse of and improper reliance on this document without written authorization and adaptation by Kimley-Horn and Associates, Inc. shall be without liability to Kimley-Horn and Associates, Inc.

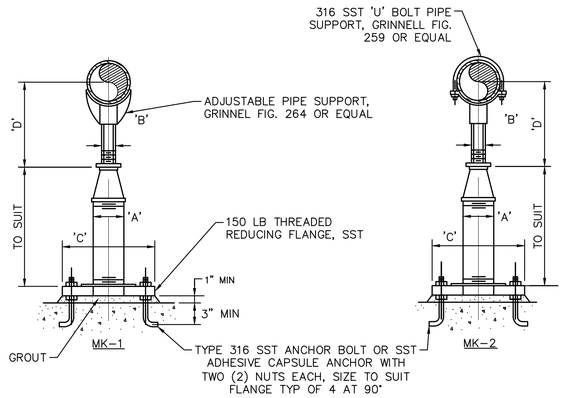

ADJUSTABLE PIPE SUPPORT APPROX. DIMENSIONS IN INCHES					
PIPE SIZE	A	B	C	D MIN.	D MAX.
2 1/2	2 1/2	1 1/2	9	8	11 1/2
3	2 1/2	1 1/2	9	8 1/4	11 3/4
3 1/2	2 1/2	1 1/2	9	8 1/2	12
4	3	2 1/2	9	10 1/4	14
6	3	2 1/2	9	11 5/8	15 1/4
8	3	2 1/2	9	13 5/8	16 1/2
10	3	2 1/2	9	14 5/8	18 1/4
12	3	2 1/2	9	15 5/8	19 3/4
14	4	3	11	18 5/8	20 3/4

NOTE

1. UNDER VALVES, METERS OR OTHER SPECIAL APPURTENANCES. A FABRICATED SUPPORT PIECE MAY BE UTILIZED AS ACCEPTABLE TO ENGINEER

1 / M-6 STANCHION PIPE SUPPORT DETAIL

Scale: N.T.S.

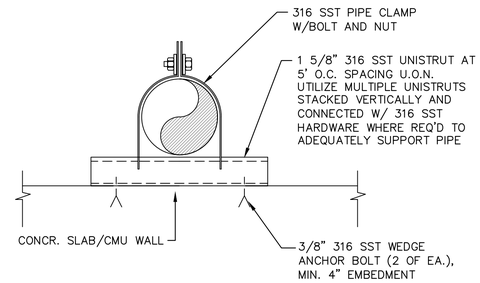

2 / M-6 PIPE SUPPORT DETAIL

Scale: N.T.S.

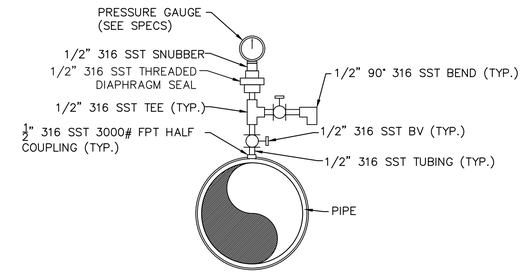

3 / M-6 PRESSURE INDICATOR DETAIL

Scale: N.T.S.

CONFORMED SET

No.	REVISIONS	DATE	BY

Kimley»Horn

© 2025 KIMLEY-HORN AND ASSOCIATES, INC.
1920 WEKIVA WAY SUITE 200, WEST PALM BEACH, FL 33411
PHONE: 561-845-0665 FAX: 561-863-8175
WWW.KIMLEY-HORN.COM REGISTRY NO. 696

KHA PROJECT 144957081
DATE MAY 2025
SCALE AS SHOWN
DESIGNED BY NPOB
DRAWN BY DC
CHECKED BY NPOB

HIGH PRESSURE PUMP NO. 9 IMPROVEMENTS
PREPARED FOR
VILLAGE OF WELLINGTON
PALM BEACH COUNTY FLORIDA

NICHOLAS PETER OLEISKI BLACK
LICENSE No 84908
STATE OF FLORIDA
PROFESSIONAL ENGINEER

THIS ITEM HAS BEEN DIGITALLY SIGNED AND SEALED BY
ON THE DATE ADJACENT TO THE SEAL.
THE SIGNATURE MUST BE VERIFIED ON ANY ELECTRONIC COPIES.

CONSTRUCTION DETAILS

SHEET NUMBER
M-6
9 OF 21

Printed By:Conu, Daniel Sheet Set:VOW JBP9 Layout:M-6 CONSTRUCTION DETAILS April 30, 2025 08:39:47am A:\WPB_Civil\144957081 - JBP9\CAD\Plansheets\M-6 CONSTRUCTION DETAILS.dwg
This document, together with the concepts and designs presented herein, as an instrument of service, is intended only for the specific purpose and client for which it was prepared. Reuse of and improper reliance on this document without written authorization and adaptation by Kimley-Horn and Associates, Inc. shall be without liability to Kimley-Horn and Associates, Inc.

SYMBOL	DESCRIPTION
	CONNECTION POINT TO EQUIPMENT SPECIFIED, FURNISHED AND INSTALLED UNDER OTHER DIVISIONS. RACEWAY, CONDUCTOR AND CONNECTION IN DIVISION 16 COORDINATE FINAL CONNECTION WITH EQUIPMENT SUPPLIER.
1"C,2#12,1#12G 1"C,1-25/C TYPE 1	INDICATES RACEWAY AND CIRCUIT CONDUCTORS. FIRST NUMBER IS RACEWAY SIZE. THE FOLLOWING NUMBERS ARE THE CONDUCTOR QUANTITIES,SIZES, AND TYPES
25MCC1	MAJOR ELECTRICAL COMPONENT OR DEVICE – NAME OR IDENTIFYING SYMBOL AS SHOWN.
	PANELBOARD
UH1 5KW	UNIT HEATER NO.1 SEE SCHEDULE
TTC	TELEPHONE TERMINAL CABINET
	TERMINAL JUNCTION BOX
10	WOUND-ROTOR MOTOR, HORSEPOWER INDICATED
5	MOTOR, SQUIRREL CAGE INDUCTION – HORSEPOWER INDICATED
1/2	DC MOTOR, HORSEPOWER INDICATED
1 1	LUMINAIRE – SEE SCHEDULE
2	LUMINAIRE – SEE SCHEDULE
3	LUMINAIRE AND POLE – SEE SCHEDULE
4	WALL MOUNTED LUMINAIRE – SEE SCHEDULE
5	FLOOD LIGHTS – AIM IN THE DIRECTION SHOWN
	EXIT LIGHTS – SEE SCHEDULE
6	EMERGENCY LIGHTING FIXTURE – SEE SCHEDULE
S_a or OS_a 17 a	SMALL LETTER SUBSCRIPT AT SWITCH AND LUMINAIRE INDICATES SWITCHING. SUBSCRIPT NUMBER AT LUMINAIRE INDICATES CIRCUIT IN PANELBOARD.
5LP1-3	HOME RUN – DESTINATION SHOWN
or G	EXPOSED CONDUIT AND CONDUCTORS*
or G	CONCEALED CONDUIT AND CONDUCTORS*
	NOTE: * ALL UNMARKED CONDUIT RUNS CONSIST OF TWO NO.12 CONDUCTORS W/GROUND IN CONDUIT. RUNS MARKED WITH CROSSHATCHES INDICATE NUMBER OF NO.12 CONDUCTORS. CROSSHATCH WITH SUBSCRIPT "G" INDICATES GREEN GROUND WIRE. SIZE CONDUIT ACCORDING TO SPECIFICATIONS AND APPLICABLE CODE.
YC01	YCXX=YARD CONDUIT, XX IS CONDUIT NO.
	CONDUIT DOWN
	CONDUIT UP
	CONDUIT, STUBBED AND CAPPED AS SHOWN
	UNDERGROUND OR EMBEDDED CONDUIT
	EXPOSED CONDUIT
G	GROUND WIRE, 4/0 UNLESS OTHERWISE NOTED
VFD	6-PULSE VARIABLE FREQUENCY DRIVE
VFD	18-PULSE VARIABLE FREQUENCY DRIVE

SYMBOL	DESCRIPTION
	GROUND ROD
S	WALL SWITCH 2– DOUBLE POLE; 3– THREE WAY; 4– FOUR WAY; WP– WEATHERPROOF; P– PILOT LIGHT; K– KEY OPERATED; D– DIMMER; CRE– CORROSION RESISTANT
S_M	MANUAL MOTOR STARTER SWITCH
	CONVENIENCE RECEPTACLE – DUPLEX UNLESS SPECIFIED OTHERWISE WP– WEATHERPROOF C– CLOCK HANGER TL– TWIST LOCK CRE– CORROSION RESISTANT
	CONVENIENCE RECEPTACLE – QUADRUPLEX UNLESS SPECIFIED OTHERWISE WP– WEATHERPROOF C– CLOCK HANGER TL– TWIST LOCK CRE– CORROSION RESISTANT
	CONVENIENCE RECEPTACLE – DUPLEX UNLESS SPECIFIED OTHERWISE – FLUSH IN FLOOR
	CONVENIENCE RECEPTACLE, PEDESTAL OR ABOVE COUNTER DUPLEX, UNLESS INDICATED OTHERWISE
	MULTI-OUTLET ASSEMBLY RECEPTACLES
30	RECEPTACLE, SPECIAL PURPOSE – AMPERAGE AS INDICATED
	TELEPHONE/DATA RECEPTACLE (OUTLET BOX ONLY) WITH 1" CONDUIT TO TELEPHONE TERMINAL CABINET (TTC)
	TELEPHONE/DATA RECEPTACLE (FLUSH IN FLOOR OUTLET BOX ONLY) WITH 1" CONDUIT TO TELEPHONE TERMINAL CABINET (TTC)
W	TELEPHONE RECEPTACLE (OUTLET BOX 48" AFF ONLY) WITH 3/4" CONDUIT TO TELEPHONE TERMINAL CABINET (TTC)
TV	COAXIAL CABLE RECEPTACLE (OUTLET BOX INSTALLED 18" AFF ONLY) WITH 1" CONDUIT TO TELEPHONE TERMINAL CABINET (TTC)
J	GENERAL CONTROL OR WIRING DEVICE. NEMA 4X ENCLOSURE UNLESS INDICATED OTHERWISE. LETTER SYMBOLS OR ABBREVIATIONS INDICATE TYPE OF DEVICE.
30A 4XSS	NONFUSED DISCONNECT SWITCH, SIZE INDICATED, 3 POLE UNLESS INDICATED OTHERWISE, NEMA 1 ENCLOSURE, 4XSS = WEATHERPROOF (NEMA 4X 316SS)
40F 60A	FUSED DISCONNECT SWITCH, SIZE INDICATED (60/40, 60 = SWITCH RATING: 40 = FUSE RATING) 3 POLE UNLESS INDICATED OTHERWISE, NEMA 1 ENCLOSURE, WP = WEATHERPROOF (NEMA 4X)
2	STARTER MAGNETIC NEMA SIZE INDICATED, NEMA 1 ENCLOSURE, UNLESS INDICATED OTHERWISE. SEE CONTROL DIAGRAM.
2	COMBINATION (FUSE OR CIRCUIT BREAKER AS INDICATED). MAGNETIC STARTER, NEMA SIZE INDICATED, NEMA 1 ENCLOSURE UNLESS INDICATED OTHERWISE. SEE CONTROL SCHEMATIC DIAGRAM.
1	CONTACT – NORMALLY OPEN WITH NEMA SIZE INDICATED OR COIL IDENTIFICATION AS APPLICABLE
1	CONTACT – NORMALLY CLOSED WITH NEMA SIZE INDICATED OR COIL IDENTIFICATION AS APPLICABLE
	OVERLOAD RELAY HEATER
1	MAGNETIC STARTER WITH NEMA SIZE INDICATED
100 MCP	CIRCUIT BREAKER, MAGNETIC, TRIP SHOWN, 3 POLE UNLESS INDICATED OTHERWISE
400	CIRCUIT BREAKER, THERMAL MAGNETIC TRIP SHOWN, 3 POLE UNLESS INDICATED OTHERWISE.
400 400	CIRCUIT BREAKER WITH CURRENT LIMITING FUSES, TRIP AND FUSE RATING INDICATED, 3 POLE UNLESS INDICATED OTHERWISE.
400 225	FUSED SWITCH, SWITCH AND FUSE CURRENT RATING INDICATED, 3 POLE UNLESS INDICATED OTHERWISE.
100	SWITCH – CURRENT RATING INDICATED, 3 POLE UNLESS INDICATED OTHERWISE.
XXX YYY	DRAWOUT CIRCUIT BREAKER, LOW VOLTAGE, XXX = FRAME RATING, YYY = TRIP RATING
	DRAWOUT CIRCUIT BREAKER, MEDIUM VOLTAGE
	DRAWOUT FUSED SWITCH, MEDIUM VOLTAGE
	LIGHTNING ARRESTER

SYMBOL	DESCRIPTION
	FUSE
	CAPACITOR OR SURGE CAPACITOR
SW V 0–600V	METER WITH SWITCH – SCALE RANGE SHOWN
	GROUND
120V or 120/240V 15 KVA 1 PH	TRANSFORMER, VOLTAGES, PHASE AND RATING INDICATED AS APPLICABLE
GFR	GROUND FAULT RELAY WITH C.T.
	PUSH-BUTTON SWITCH, MOMENTARY CONTACT, NORMALLY OPEN
	PUSH-BUTTON SWITCH, MOMENTARY CONTACT, NORMALLY CLOSED
	PUSH BUTTON SWITCH, MAINTAINED CONTACTS WITH MECHANICAL INTERLOCK
	REMOTE DEVICE
H O A 1 XOO 2 OOX	SELECTOR SWITCH: MAINTAINED CONTACT WITH CONTACT POSITION INDICATED, CHART IDENTIFIES OPERATION

	POSITION		
CKT.	HAND	OFF	AUTO
1	X	O	O
2	O	O	X

X – CLOSED CONTACT
O – OPEN CONTACT

SYMBOL	DESCRIPTION
200/5 (3)	CURRENT TRANSFORMER, NUMBER AND RATIO INDICATED
A	PUSH-TO-TEST AND CONNECT, INDICATING LIGHT A – AMBER G – GREEN B – BLUE R – RED C – CLEAR W – WHITE LETTER INDICATES COLOR
XX	PROTECTIVE RELAY XX = 47 PHASE FAILURE/PHASE REVERSE 50 INSTANTANEOUS 51 TIME OVERCURRENT 51GS GROUND FAULT/GROUND SENSOR
K K	KIRK KEY INTERLOCK
	ELECTRIC RESISTANCE HEATER
L LR U	LATCHING RELAY
CR	120V CONTROL RELAY
SOL	SOLENOID
DCR	CONTROL RELAY, 24V DC COIL

TIME DELAY CONTACTS

NORMALLY OPEN, TIMED OPEN	NORMALLY OPEN, TIMED CLOSED
NORMALLY CLOSED, TIMED OPEN	NORMALLY CLOSED, TIMED CLOSED

LIQUID LEVEL

	OPENS ON RISING LEVEL, CLOSES ON FALLING LEVEL
	CLOSES ON RISING LEVEL, OPENS ON FALLING LEVEL

PRESSURE

	OPENS ON RISING PRESSURE, CLOSES ON FALLING PRESSURE
	CLOSES ON RISING PRESSURE, OPENS ON FALLING PRESSURE

FLOW

	OPENS ON RISING FLOW, CLOSES ON FALLING FLOW
	CLOSES ON RISING FLOW, OPENS ON FALLING FLOW

SYMBOL	DESCRIPTION
	TEMPERATURE OPENS ON RISING TEMPERATURE, CLOSES ON FALLING TEMPERATURE
	CLOSES ON RISING TEMPERATURE, OPENS ON FALLING TEMPERATURE
	LIMIT SWITCH HELD OPEN, NORMALLY CLOSED
	NORMALLY CLOSED
	NORMALLY OPEN
	HELD CLOSED, NORMALLY OPEN

NOTE:
THIS IS A STANDARD LEGEND SHEET. SOME SYMBOLS OR ABBREVIATIONS MAY APPEAR ON THIS SHEET AND NOT BE UTILIZED ON PROJECT.

LINE WEIGHTS

	NEW
	EXISTING
	FUTURE
	DEMOLITION

ABBREVIATIONS

ABBREVIATIONS	DESCRIPTION
A	AMMETER, AMPERE, AMBER
AC	ALTERNATING CURRENT
AFF	ABOVE FINISHED FLOOR
AFG	ABOVE FINISHED GRADE
AL	ALUMINUM
ALT	ALTERNATE
AM	AUTO-MANUAL
AS	AMMETER SWITCH,
ATS	AUTOMATIC TRANSFER SWITCH
BRKR	BREAKER
C	CONDUIT, CONTACTOR
CB	CIRCUIT BREAKER
CKT	CIRCUIT
CMP	CENTRAL MONITORING PNL
CPT	CONTROL POWER TRANSFORMER
CR	CONTROL RELAY
CT	CURRENT TRANSFORMER
EHD	ELECTRIC HAND DRYER
EF	EXHAUST FAN
EG	EQUIPMENT GROUND
EMH	ELECTRICAL MAHHOLE
EPB	ELECTRICAL PULL BOX
ETM	ELAPSED TIME METER
DISC	DISCONNECT
DIST	DISTRIBUTION
DODE	DELAY UPON DE-ENERGIZATION
DOE	DELAY UPON ENERGIZATION
FC	FULLY CLOSED
FDR	FEEDER
FM	FLOW METER
FS	FLOAT SWITCH
FT	FLOW TRANSMITTER
FUT	FUTURE
FVNR	FULL VOLTAGE NON-REVERSING STARTER
G	GREEN, GROUND
GALV	GALVANIZED
GFI	GROUND FAULT INTERRUPTER
GEN	GENERATOR
GFR	GROUND FAULT RELAY
GND	GROUND
GRS	GALVANIZED RIGID STEEL
HH	HANDHOLE
HID	HIGH INTENSITY DISCHARGE
HOA	HAND-OFF-AUTO
HOR	HAND-OFF-REMOTE
IC	INSTANTANEOUS CLOSE
I & C	INSTRUMENTATION AND CONTROL
JB	JUNCTION BOX
K	KEY INTERLOCK
KW	KILOWATT
LA	LIGHTNING ARRESTER
LC	LIGHTING CONTACTOR
LLS	LIQUID LEVEL SWITCH
LS	LIMIT SWITCH
LT FLEX	LIQUID TIGHT FLEX CONDUIT
LTG	LIGHTING
LP	LIGHTING PANEL
LR	LOCAL-REMOTE, LATCHING RELAY
M	MAGNETIC CONTACTOR COIL
MA	MANUAL-AUTO
MANUF	MANUFACTURER
MCC	MOTOR CONTROL CENTER
MCP	MOTOR CIRCUIT PROTECTOR
MDS	MAIN SERVICE DISCONNECT SWITCH
MDP	MAIN DISTRIBUTION PANEL
MH	MANHOLE
MS	MOTOR STARTER
MIN	MINIMUM
N	NEUTRAL
NC	NORMALLY CLOSED
NEMA	NATIONAL ELECTRIC MANUFACTURERS ASSOCIATION
NO	NORMALLY OPEN
NP	NAMEPLATE
NTS	NOT TO SCALE
OC	OPEN-CLOSE (D)
OCA	OPEN-CLOSE-AUTO
OCR	OPEN-CLOSE-REMOTE
OL	OVERLOAD RELAY
OO	ON-OFF
OOA	ON-OFF-AUTO
OOR	ON-OFF-REMOTE
OSC	OPEN-STOP-CLOSE
P	POLE
PB	PULL BOX
PE	PHOTOCELL
PH	PHASE
PM	PHASE MONITOR
PNL	PANELBOARD
PR	PAIR
PT	POTENTIAL TRANSFORMER
PVC	POLYVINYL CHLORIDE CONDUIT
QNTY	QUANTITY
RPC	REMOTE POWER CENTER
R	RED
RCPT	RECEPTACLE
R/I	RESISTANCE TO CURRENT CONVERTER
RMS	ROOT MEAN SQUARE
RS	RIGID STEEL CONDUIT
RTU	REMOTE TELEMETRY UNIT
SC	SURGE CAPACITOR
SF	SUPPLY FAN
SMH	SIGNAL MANHOLE
SPB	SIGNAL PULL BOX
SS	STAINLESS STEEL, SELECTOR SWITCH
SSRV	SOLID STATE REDUCED VOLTAGE STARTER
S	SWITCH
SYM	SYMMETRICAL
TC	TIMED CLOSE
TDR	TIME DELAY RELAY
TDAD	TIME DELAY AFTER DE-ENERGIZATION
TDAE	TIME DELAY AFTER ENERGIZATION
TJB	TERMINAL JUNCTION BOX
TO	TIMED OPEN
TR	TRIPLE, TIMING RELAY
TS	THERMAL SWITCH
TSP	TWISTED SHIELDED PAIR
TURB	TURBIDITY
TYP	TYPICAL
UVR	UNDER VOLTAGE RELAY
V	VOLTMETER, VOLT
VFD	VARIABLE FREQUENCY DRIVE
VS	VOLTMETER SWITCH
WP	WEATHERPROOF
XFMR	TRANSFORMER

CONFORMED SET

NOT FOR CONSTRUCTION

HILLERS ELECTRICAL ENGINEERING, INC.
23257 STATE ROAD 7, SUITE 100
BOCA RATON, FLORIDA 33428
(561) 451-9165
(561) 451-4886 FAX
LICENSE NO: EB 0006877

VERIFY SCALES
BAR IS ONE INCH ON ORIGINAL DRAWING
0 1"
IF NOT ONE INCH ON THIS SHEET, ADJUST SCALES ACCORDINGLY.

No.	REVISIONS	DATE	BY
1	CONTRACT MODIFICATIONS	10/16/24	BKH

Kimley»Horn
© 2023 KIMLEY-HORN AND ASSOCIATES, INC.
1920 WEKIVA WAY SUITE 200, WEST PALM BEACH, FL 33411
PHONE: 561-845-0665 FAX: 561-863-8175
WWW.KIMLEY-HORN.COM REGISTRY NO. 696

KHA PROJECT 144957081
DATE MAY 2025
SCALE AS SHOWN
DESIGNED BY BKH
DRAWN BY BKH
CHECKED BY MEL

HIGH PRESSURE PUMP NO. 9 IMPROVEMENTS

PREPARED FOR

VILLAGE OF WELLINGTON

PALM BEACH COUNTY FLORIDA

BRANDON HAAS LICENSE No 85334 STATE OF FLORIDA PROFESSIONAL ENGINEER

This item has been digitally signed and sealed by

ELECTRICAL LEGEND AND SYMBOLS

on the date adjacent to the seal.

The signature must be verified on any electronic copies.

SHEET NUMBER

E-1

10 OF 21

This document, together with the concepts and designs presented herein, as an instrument of service, is intended only for the specific purpose and client for which it was prepared. Reuse of and improper reliance on this document without written authorization and adaptation by Kimley-Horn and Associates, Inc. shall be without liability to Kimley-Horn and Associates, Inc.

GENERAL NOTES AND SPECIFICATIONS:

1. THE SCOPE OF WORK SHALL BE AS DESCRIBED IN SPECIFICATION SECTION 16010 AND AS SHOWN ON DRAWINGS.
2. THE CONTRACTOR SHALL PROVIDE ALL MATERIALS AND LABOR TO INSTALL THE ELECTRICAL SYSTEMS AS INDICATED ON THE DRAWINGS. ITEMS NOT SHOWN BUT OBVIOUSLY NECESSARY FOR COMPLETION OF THE WORK SHALL BE INCLUDED.
3. PRIOR TO SUBMITTING A BID, THE CONTRACTOR SHALL CONTACT SQUARE D/SCHNEIDER ELECTRIC TO VERIFY THEIR SCOPE OF SERVICES. ANY WORK SPECIFIED IN THESE DRAWINGS AND SPECIFICATIONS AND NOT FURNISHED BY THE OWNER FURNISHED EQUIPMENT PURCHASE FROM SQUARE D SHALL BE FURNISHED BY THE CONTRACTOR. THE INTENTION IS FOR THE CONTRACTOR TO RETAIN COMPLETE RESPONSIBLITY FOR COMPLIANCE WITH THE DRAWINGS AND SPECIFICATIONS. THIS INCLUDES ALL SCHEDULING, START-UP, TESTING AND TRAINING SERVICES REQUIRED TO INSTALL OWNER PURCHASED EQUIPMENT FOR A WORKING SYSTEM COMPLETE IN PLACE AND IN COMPLIANCE WITH THESE DRAWINGS AND THE SPECIFICATIONS. 1
4. DRAWINGS THAT ILLUSTRATE EXISTING STRUCTURES, PIPING, ELECTRICAL AND EQUIPMENT ARE BASED UPON RECORD DRAWINGS AVAILABLE UPON REQUEST FOR GENERAL INFORMATIONAL PURPOSES ONLY. LOCATION, SIZE AND ALIGNMENT OF EXISTING FACILITIES HAVE BEEN DETERMINED FROM AVAILABLE RECORDS. THIS INFORMATION IS FURNISHED AS A GUIDE FOR THE CONTRACTOR. THE ENGINEER AND THE OWNER DO NO GUARANTEE THE ACCURACY OF THIS DATA. THE CONTRACTOR SHALL BE FULLY RESPONSIBLE FOR DETERMINING THE LOCATION AND PROTECTING ALL TYPES OF UTILITIES AND STRUCTURES ENCOUNTERED DURING THE COURSE OF OPERATION ON THIS PROJECT. FIELD OBSERVATIONS INDICATE THAT FIELD CONDITIONS DO NOT FULLY MATCH THE ABOVE REFERENCED RECORD DRAWINGS.
5. THE INSTALLATION SHALL BE IN ACCORDANCE WITH THE 2020 NATIONAL ELECTRICAL CODE (NFPA 70), 2024 ELECTRICAL SAFETY IN THE WORKPLACE (NFPA 70E), LOCAL CODES, VILLAGE CODES, ALL PALM BEACH COUNTY CODES AND 2023 FLORIDA BUILDING CODE INCLUDING PALM BEACH COUNTY AMENDMENTS.
6. THE CONTRACTOR SHALL OBTAIN ALL NECESSARY PERMITS, INSPECTIONS AND APPROVALS AND TO INCLUDE ALL FEES AS PART OF HIS BID IF NOT OTHERWISE NOTED.
7. THE CONTRACTOR SHALL COORDINATE THE WORK WITH THE ENGINEER AND OWNER.
8. THE CONTRACTOR SHALL, BEFORE SUBMITTING A BID, VISIT THE SITE OF THE PROJECT AND BECOME FAMILIAR WITH THE EXISTING CONDITIONS. NO ALLOWANCE WILL BE MADE FOR EXISTING CONDITIONS OR FAILURE OF THE CONTRACTOR TO OBSERVE THEM.
9. ALL EQUIPMENT AND MATERIAL SHALL BE UNUSED AND U.L. LISTED. ALL REFERENCES TO A PARTICULAR MANUFACTURER ARE GIVEN ON AN "APPROVED EQUAL" BASIS, UNLESS SPECIFICALLY NOTED OTHERWISE.
10. THE CONTRACTOR IS RESPONSIBLE TO TEST ALL SYSTEMS INSTALLED OR MODIFIED UNDER THIS PROJECT AND REPAIR OR REPLACE ALL DEFECTIVE WORK TO THE SATISFACTION OF THE ENGINEER AND OWNER.
11. ALL EQUIPMENT FURNISHED AND INSTALLED BY THE CONTRACTOR SHALL BE GUARANTEED AGAINST DEFECTS IN MATERIAL AND WORKMANSHIP FOR A PERIOD OF ONE YEAR FROM DATE OF FINAL ACCEPTANCE.
12. ALL CONDUCTORS SHALL BE COPPER. NO ALUMINUM ALLOWED UNLESS SPECIFICALLY INDICATED ON DRAWINGS.
13. SHOP DRAWINGS SHALL BE SUBMITTED FOR ALL ELECTRICAL & CONTROL EQUIPMENT AND MATERIAL.
14. ALL CONTROL PANELS SHALL BE CONSTRUCTED BY A UL 508A APPROVED PANEL VENDOR AND SHALL BEAR A UL 508A LABEL ON THE PANEL.
15. THE DRAWINGS ARE NOT INTENDED TO SHOW THE EXACT LOCATION OF CONDUIT RUNS. THESE ARE TO BE COORDINATED WITH THE OTHER TRADES SO THAT CONFLICTS ARE AVOIDED PRIOR TO INSTALLATIONS.
16. ALL LOCATIONS OF EQUIPMENT, PANELS ETC. ARE SHOWN FOR ILLUSTRATION PURPOSES. CONTRACTOR SHALL VERIFY AND COORDINATE EXACT LOCATION AND SIZE WITH ALL SUBCONTRACTORS AND EQUIPMENT SUPPLIERS PRIOR TO ANY INSTALLATION AND THEN INSTALL AS SUCH WITH CORRESPONDING CONDUIT STUB-UPS.
17. LOCATIONS OF MANHOLES, HANDHOLES AND PULL BOXES ARE APPROXIMATE. CONTRACTOR SHALL COORDINATE EXACT LOCATION WITH EXISTING AND NEW PIPING OR CONDUIT AND ADJUST ACCORDINGLY.
18. NOT ALL CONDUITS SHOWN ON RISER AND ONE-LINE DIAGRAMS ARE SHOWN ON BUILDING LAYOUTS. CONTRACTOR SHALL SUPPLY ALL CONDUITS AND CABLES AS SHOWN ON RISER AND ONE-LINE DIAGRAMS.
19. ALL CIRCUITS SHALL BE IDENTIFIED IN JUNCTION BOXES, PULL BOXES, CONTROL PANELS, PANELBOARDS, LIGHTING POLES, CONTROLLERS AND SERVICE POINTS. IDENTIFICATION SHALL MATCH PANELBOARD SCHEDULES.
20. EXPOSED RUNS OF CONDUITS SHALL BE INSTALLED WITH RUNS PARALLEL OR PERPENDICULAR TO WALLS, STRUCTURAL MEMBERS OR INTERSECTIONS OF VERTICAL PLANES AND CEILINGS, WITH RIGHT ANGLE TURNS CONSISTING OF SYMMETRICAL BENDS OR PULL BOXES AS INDICATED ON THE DRAWINGS. BENDS AND OFFSETS SHALL BE AVOIDED WHERE POSSIBLE.
21. ELECTRICAL CONDUIT ROUTING IS SHOWN FOR ILLUSTRATION PURPOSES ONLY. CONTRACTOR SHALL FIELD VERIFY THE CONDUIT ROUTING WITH EXISTING CONDITIONS AND PROPOSED PIPING, DRAINAGE, ETC. TO AVOID CONFLICTS AND ADJUST ACCORDINGLY. SOME CONDUIT ROUTINGS REQUIRE FIELD DETERMINATION OF THE ROUTINGS TO AVOID CONFLICTS WITH EXISTING CONDITIONS.
22. CONTRACTOR SHALL SAW CUT EXISTING SIDEWALK, ROADWAY, CONCRETE SLAB, ETC. FOR CONDUIT OR COUNTERPOISE CROSSING AND REPAIR/RESTORE TO MATCH EXISTING CONDITION.
23. NO CONDUIT SHALL PENETRATE AN OUTDOOR ELECTRICAL PANEL FROM TOP. FOR OUTDOOR ELECTRICAL PANELS, ALL CONDUIT PENETRATIONS SHALL BE FROM THE BOTTOM OR SIDE. PROVIDE NEMA 4X 316 STAINLESS STEEL J-BOX AS NECESSARY TO ASSIST CONDUITS ENTERING OUTDOOR ELECTRICAL PANEL.
24. ALL EXPOSED CONDUITS SHALL BE ROUTED TO AVOID A TRIPPING HAZARD, WHERE POSSIBLE. WHEN APPROVED BY ENGINEER AND OWNER, EXPOSED CONDUITS CAN BE MOUNTED ON FLOOR, PROVIDE ALUMINUM RAMP COVER AS PER DETAIL FOR FLOOR MOUNTED CONDUITS.
25. INSTRUMENTATION IS LOW VOLTAGE SIGNALS SUCH AS 4-20MA, TELEPHONE COMMUNICATION, FIRE ALARM COMMUNICATION. POWER CONDUIT SHALL ONLY CROSS INSTRUMENTATION CONDUIT PERPENDICULARLY AT RIGHT ANGLES WITH 6" SEPARATION.
26. CONDUCTOR PULLING TENSIONS SHALL NOT EXCEED MANUFACTURER'S RECOMMENDATION. CONTRACTOR SHALL INSTALL PULL BOXES TO MEET MANUFACTURER'S REQUIREMENTS.
27. MINIMUM DISTANCE ALLOWED BETWEEN POWER CONDUITS AND INSTRUMENTATION CONDUITS SHALL BE:

VOLTAGE	DISTANCE
4160V	3 FT
480V	2 FT
120V	1 FT

28. THE CONTRACTOR SHALL BE RESPONSIBLE FOR ALL CONDUIT AND WIRING INSTALLATION FOR ALL VENDOR PROVIDED EQUIPMENT (PACKAGE SYSTEMS) AND OWNER FURNISHED EQUIPMENT. IF THE SHOP DRAWINGS DIFFER FROM THE DESIGNED FACILITIES, THE CONTRACTOR SHALL REDESIGN THE FACILITIES AND SUBMIT THE REVISED DESIGN FOR THE ENGINEER'S APPROVAL ALONG WITH THE SHOP DRAWINGS. THERE SHALL BE NO ADDITIONAL COST TO THE OWNER FOR THE REDESIGN NOR FOR ANY ADDITIONAL CONDUITS AND WIRING. DURING SUBMITTAL THE CONTRACTOR SHALL VERIFY ALL SUPPLIED BREAKER SIZES FOR ALL PACKAGED SYSTEMS SUCH AS HVAC, EXHAUST FANS, MIXERS, CHEMICAL PUMPS ETC. AND MODIFY ALL BREAKERS IN MCC'S AND PANELBOARDS ACCORDINGLY WITHOUT ANY ADDITIONAL COST TO THE OWNER.
29. COLORED WARNING TAPE 6" WIDE SHALL BE INSTALLED 8" BELOW FINISHED GRADE DIRECTLY ABOVE ALL UNDERGROUND YARD CONDUITS ACCORDING TO THE FOLLOWING SCHEDULE:
    POWER: RED
    ALL OTHER CONDUITS: GREEN
30. CONTRACTOR SHALL RESTORE SIDEWALKS, ROADWAYS, SOD AND SPRINKLER SYSTEM PIPING TO MATCH EXISTING, AFTER THE COMPLETION OF THE CONDUIT AND PULL BOX INSTALLATION.
31. GROUNDING SHALL BE INSTALLED IN ACCORDANCE WITH NEC, ARTICLE 250. THE GROUNDING SYSTEM TEST SHALL NOT EXCEED A 48 HOUR SPAN DRY RESISTANCE OF 10 OHMS. ADDITIONAL GROUNDING TO MEET THIS REQUIREMENT SHALL BE INSTALLED AT NO EXTRA COST. GROUNDING AND BONDING CONNECTIONS SHALL NOT BE PAINTED. ALL GROUNDING CONNECTIONS SHALL BE EXOTHERMIC UNLESS SPECIFICALLY INDICATED OTHERWISE.
32. UNLESS OTHERWISE NOTED, UTILIZE HI-PRESS LUGS WITH STAINLESS STEEL MOUNTING HARDWARE FOR BONDING OF ALL METAL EQUIPMENT TO THE GROUNDING COUNTERPOISE WHEN USING 2/0 AWG OR LARGER GROUND WIRE.
33. AN EQUIPMENT GROUND WIRE SIZED PER NEC SHALL BE PULLED IN ALL ELECTRICAL CONDUITS, POWER AND CONTROL, WHETHER OR NOT INDICATED ON THE PLANS. RACEWAYS SHALL NOT BE USED AS GROUNDING/BONDING PATHS.
34. ALL ENCLOSURES, TJB, WIREWAY, PULL BOXES ETC. SHALL CONTAIN A GROUNDING BUS. CONNECT ALL RACEWAY BONDS TO THIS BUS VIA GROUNDING BUSHING AND EXTEND BONDING JUMPER FROM THIS BUS TO THE ENCLOSURE.
35. ALL NEMA 4X OUTDOOR PANELS SHALL BE EQUIPPED WITH A NEMA 4X BREATHER AND DRAIN TO PREVENT BUILD UP OF CONDENSATION WITHIN THE PANEL. FIELD DRILLING HOLES INTO SEALED NEMA 4X PANELS IS NOT PERMITTED.
36. CONTRACTOR SHALL CORE DRILL EXISTING CONCRETE WALLS, FLOORS, MANHOLES, HANDHOLES AND PULL BOXES FOR CONDUIT PENETRATIONS. X-RAY PRIOR TO CORE DRILLING. SEAL PENETRATIONS WITH NON-SHRINK GROUT OR APPROPRIATE FIRE RATED DEVICES WHERE APPLICABLE.
37. ALL CONDUITS PENETRATING RATED FIRE WALLS OR RATED FIRE FLOORS SHALL BE INSTALLED WITH U.L. APPROVED DEVICES TO MAINTAIN THE FIRE RATING OF THE WALL OR FLOOR PENETRATED.
38. PROVIDE CONDUIT DUCT SEAL AT ALL CONDUIT ENDS.
39. ALL SPARE CONDUITS SHALL BE SEALED WITH A CAP AT BOTH ENDS AND A PULL STRING INSTALLED WITH IDENTIFICATION ON BOTH ENDS.
40. FLEXIBLE CONDUITS SHALL BE USED TO TERMINATE ALL MOTORS AND OTHER VIBRATING EQUIPMENT AND SHALL BE BETWEEN 18" AND 3' IN LENGTH.
41. TYPEWRITTEN AND LAMINATED PANEL SCHEDULES SHALL BE INSTALLED IN EACH PANELBOARD, AND TYPEWRITTEN TERMINAL BLOCK SCHEDULES IN EACH CONTROL CABINET.
42. ALL MATERIAL IN DESIGNATED CORROSIVE AREAS SHALL BE NEMA 4X 316 STAINLESS STEEL.
43. ALL OUTDOOR LIGHTING FIXTURES SHALL BE OF COPPER FREE CONSTRUCTION.
44. ALL REFERENCES TO SS OR STAINLESS STEEL SHALL BE CONSTRUED AS MEANING OF 316 STAINLESS STEEL, UNLESS OTHERWISE NOTED.
45. CONTRACTOR SHALL BALANCE PANELBOARD LOADS AT THE END OF THE PROJECT.
46. FEEDER AND BRANCH CIRCUIT CONDUCTORS ARE SIZED FOR MAXIMUM VOLTAGE DROP OF 5 PERCENT COMBINED AT DESIGN LOAD PER THE FLORIDA BUILDING CODE ENERGY CONSERVATION CHAPTER.
47. CONTRACTOR SHALL PROVIDE TO THE OWNER RECORD DRAWINGS DEPICTING THE COMPLETED INSTALLATION AS INSTALLED INCLUDING A SINGLE LINE DIAGRAM OF THE BUILDING ELECTRICAL DISTRIBUTION AND FLOOR PLANS INDICATING THE LOCATION AND AREA SERVED BY ALL INSTALLED DISTRIBUTIONS PER THE FLORIDA BUILDING CODE ENERGY CONSERVATION CHAPTER.
48. CONTRACTOR SHALL PROVIDE TO THE OWNER OPERATING AND MAINTENANCE MANUALS (O&M MANUALS) FOR ALL EQUIPMENT PER THE FLORIDA BUILDING CODE ENERGY CONSERVATION CHAPTER. THE MANUALS SHALL INCLUDE:
    48.1. SUBMITTAL DATA STATING EQUIPMENT RATING AND SELECTED OPTIONS FOR EACH PIECE OF EQUIPMENT REQUIRING MAINTENANCE.
    48.2. O&M MANUALS FOR EACH PIECE OF EQUIPMENT REQUIRING MAINTENANCE. REQUIRED ROUTINE MAINTENANCE ACTIONS SHALL BE CLEARLY IDENTIFIED.
    48.3. NAMES AND ADDRESSES OF AT LEAST ONE QUALIFIED SERVICE AGENCY.

CONFORMED SET

NOT FOR CONSTRUCTION

HILLERS ELECTRICAL ENGINEERING, INC.
23257 STATE ROAD 7, SUITE 100
BOCA RATON, FLORIDA 33428
(561) 451-9165
(561) 451-4886 FAX
LICENSE NO: EB 0006877

VERIFY SCALES
BAR IS ONE INCH ON ORIGINAL DRAWING
0 1"
IF NOT ONE INCH ON THIS SHEET, ADJUST SCALES ACCORDINGLY.

No.	REVISIONS	DATE	BY
1	CONTRACT MODIFICATIONS	10/16/24	BKH

Kimley»Horn
© 2023 KIMLEY-HORN AND ASSOCIATES, INC.
1920 WEKIVA WAY SUITE 200, WEST PALM BEACH, FL 33411
PHONE: 561-845-0665 FAX: 561-863-8175
WWW.KIMLEY-HORN.COM REGISTRY NO. 696

KHA PROJECT 144957081
DATE MAY 2025
SCALE AS SHOWN
DESIGNED BY BKH
DRAWN BY BKH
CHECKED BY MEL

HIGH PRESSURE PUMP NO. 9 IMPROVEMENTS
PREPARED FOR
VILLAGE OF WELLINGTON
PALM BEACH COUNTY FLORIDA

BRANDON HAAS LICENSE No 85334 STATE OF FLORIDA PROFESSIONAL ENGINEER

This item has been digitally signed and sealed by on the date adjacent to the seal.
The signature must be verified on any electronic copies.

ELECTRICAL GENERAL NOTES AND SPECIFICATIONS

SHEET NUMBER
E-2
11 OF 21

Plotted By:Brandon Haas Sheet Set:AH126 Wellington WTP HPP9 Improvements Layout:ELECTRICAL GENERAL NOTES AND SPECIFICATIONS Apr 30, 2025 01:52:59pm E:\PROJECTS\AH\AH126 wellington hpp9 improvements\Drawings\Electrical\AH126-E02.dwg
This document, together with the concepts and designs presented herein, as an instrument of service, is intended only for the specific purpose and client for which it was prepared. Reuse of and improper reliance on this document without written authorization and adaptation by Kimley-Horn and Associates, Inc. shall be without liability to Kimley-Horn and Associates, Inc.

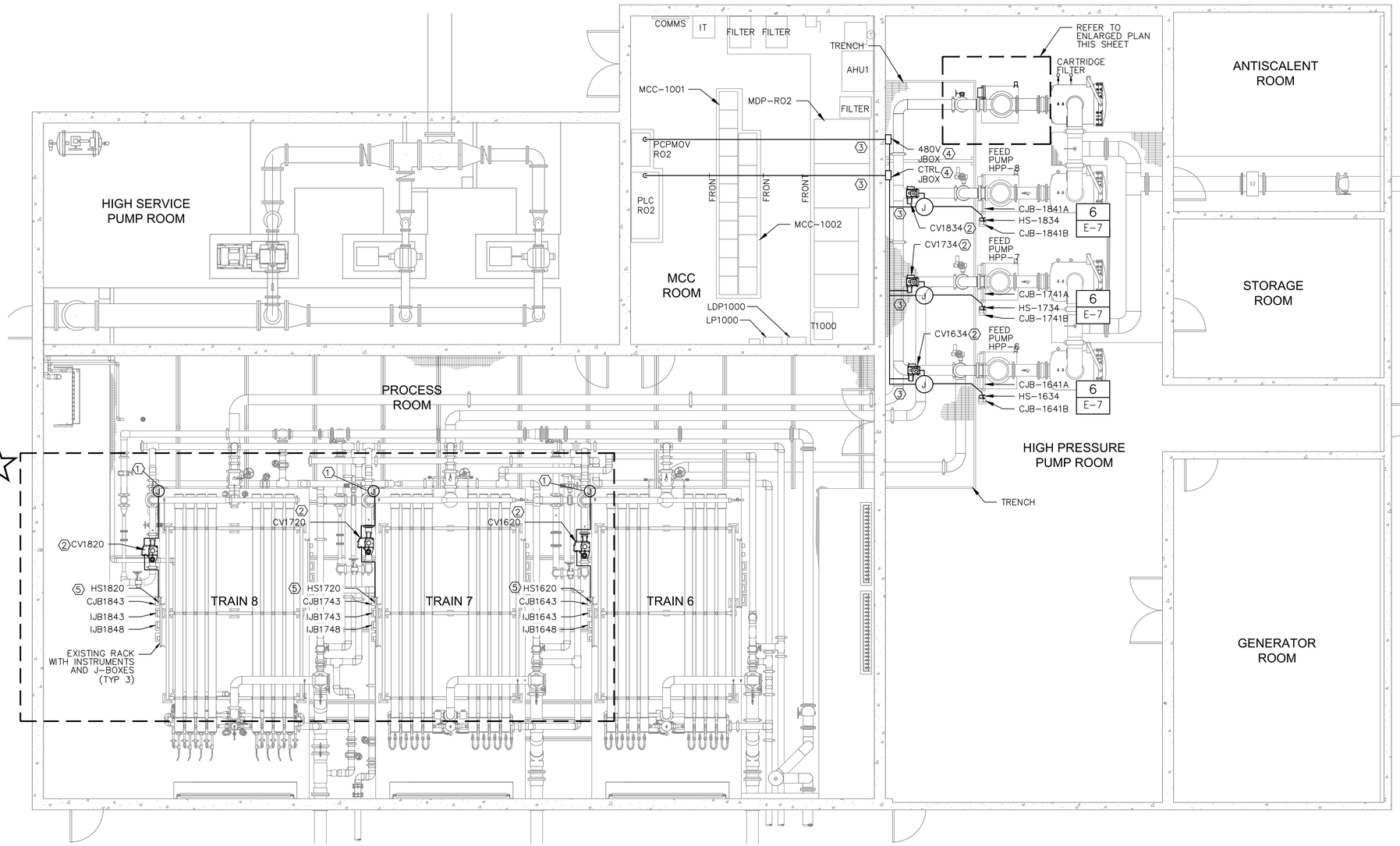

MEMBRANE 2 MODIFIED ELECTRICAL PLAN

Scale: 3/16" = 1'-0"

GRAPHIC SCALE IN FEET 6 4 2 0 4

NORTH

GENERAL NOTES:

1. REFER TO DRAWING E-2 FOR GENERAL NOTES THAT APPLY TO ALL PLAN VIEW DRAWINGS.
2. REFER TO MODIFIED ONE-LINE DIAGRAMS, DRAWING X, FOR WIRE AND RACEWAY INFORMATION.
3. ELECTRICAL CONDUIT ROUTING IS SHOWN FOR SUGGESTED LOCATION AND ILLUSTRATION PURPOSES ONLY. CONTRACTOR SHALL FIELD VERIFY THE CONDUIT ROUTING WITH EXISTING CONDITIONS TO AVOID CONFLICTS AND ADJUST ACCORDINGLY.
4. ALL MOUNTING HARDWARE SHALL BE 316 STAINLESS STEEL.

KEYED NOTES:

1. APPROXIMATE LOCATION OF 480V POWER CONDUIT TO INTERCEPT IS BELOW THE GRATING. EXTEND TO NEW CONCENTRATE CONTROL VALVE ACTUATOR PER THE RISER DIAGRAM DRAWING E-6. FIELD ROUTE EXPOSED IN TRENCH SUPPORTED ON WALL. ADJUST TO AVOID OBSTACLES.
2. ELECTRIC ACTUATOR LOCATED ABOVE TRENCH GRATING. CONDUITS SHALL BE ROUTED INSIDE OF TRENCH AND TURN UP AT EQUIPMENT. MODIFY GRATING AS NEEDED FOR CONDUIT PENETRATIONS.
3. CONDUITS TO INTERFACE HPP-6, HPP-7 AND HPP-8 SWING VALVE ACTUATORS WITH POWER AND CONTROLS INSIDE OF PCPMOVRO2 SHALL BE FIELD ROUTED IN THE TRENCH, TRANSITION TO EXPOSED AT THE WALL. MODIFY THE GRATING AS NEEDED FOR CONDUIT PENETRATIONS. FIELD ROUTE UP WALL AND TRANSITION TO MCC ROOM OVERHEAD, APPROXIMATELY 12' AFF. FIELD LOCATE AND CORE DRILL PENETRATION. FIELD ROUTE TO THE PVPMOVRO2 PANEL ABOVE THE DROP IN ACOUSTICAL TILE CEILING. ADJUST TO AVOID OBSTACLES. RESTORE WITH 2-HOUR FIRE RATING SYSTEM. REPLACE ALL TILES DAMAGED FROM WORK UPON COMPLETION OF CONDUIT.
4. FIELD LOCATE JUNCTION BOXES SUCH THAT THEY DO NOT PREVENT REMOVAL OF GRATING.
5. REPLACE EXISTING PUSH BUTTON STATION WITH NEW.

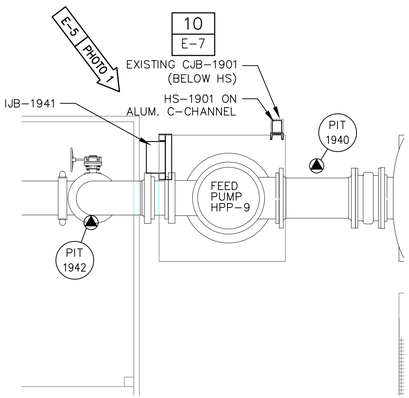

HPP-9 ENLARGED ELECTRICAL PLAN

Scale: 1/2" = 1'-0"

GRAPHIC SCALE IN FEET 1 0 1 3

NORTH

LEGEND:

1 BID ALTERNATE ITEM #1

CONFORMED SET

NOT FOR CONSTRUCTION

HILLERS ELECTRICAL ENGINEERING, INC.
23257 STATE ROAD 7, SUITE 100
BOCA RATON, FLORIDA 33428
(561) 451-9165
(561) 451-4886 FAX
LICENSE NO: EB 0006877

VERIFY SCALES
BAR IS ONE INCH ON ORIGINAL DRAWING
0 1"
IF NOT ONE INCH ON THIS SHEET, ADJUST SCALES ACCORDINGLY.

No.	REVISIONS	DATE	BY
1	CONTRACT MODIFICATIONS	10/16/24	BKH

Kimley»Horn

© 2023 KIMLEY-HORN AND ASSOCIATES, INC.
1920 WEKIVA WAY SUITE 200, WEST PALM BEACH, FL 33411
PHONE: 561-845-0665 FAX: 561-863-8175
WWW.KIMLEY-HORN.COM REGISTRY NO. 696

KHA PROJECT 144957081
DATE MAY 2025
SCALE AS SHOWN
DESIGNED BY BKH
DRAWN BY BKH
CHECKED BY MEL

HIGH PRESSURE PUMP NO. 9 IMPROVEMENTS

PREPARED FOR

VILLAGE OF WELLINGTON

PALM BEACH COUNTY FLORIDA

BRANDON HAAS LICENSE No 85334 STATE OF FLORIDA PROFESSIONAL ENGINEER

This item has been digitally signed and sealed by

on the date adjacent to the seal.

The signature must be verified on any electronic copies.

MEMBRANE BUILDING 2 MODIFIED ELECTRICAL PLAN

SHEET NUMBER

E-3

12 OF 21

This document, together with the concepts and designs presented herein, as an instrument of service, is intended only for the specific purpose and client for which it was prepared. Reuse of and improper reliance on this document without written authorization and adaptation by Kimley-Horn and Associates, Inc. shall be without liability to Kimley-Horn and Associates, Inc.

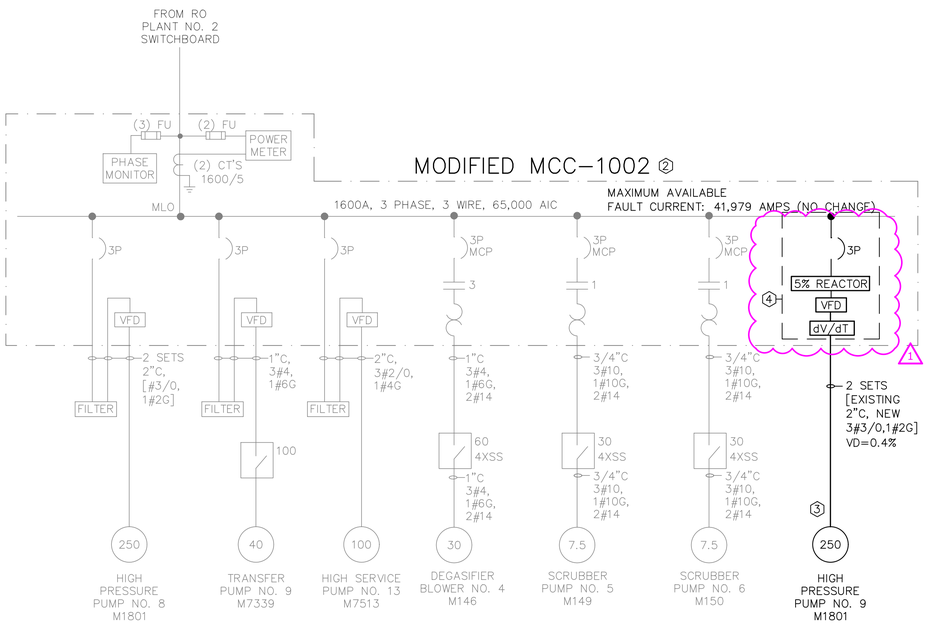

MODIFIED MCC-1002 ONE-LINE DIAGRAM

NOT TO SCALE

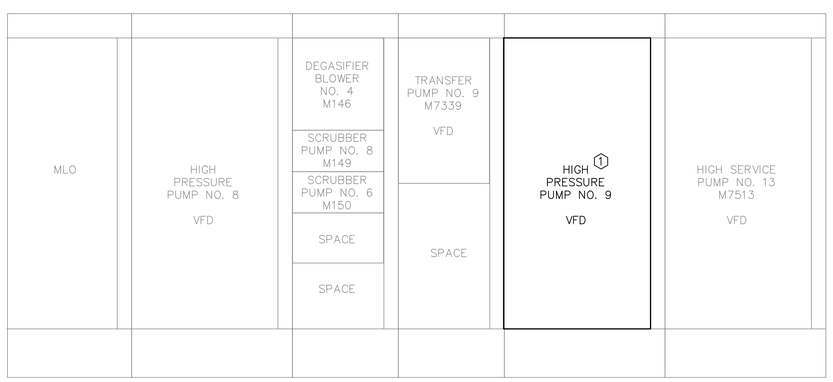

MODIFIED MCC-1002 ELEVATION

NOT TO SCALE

MCC-1002 LOAD SUMMARY (480VAC)

DESCRIPTION	CL	RL
HIGH SERVICE PUMP NO. 13	124.0 A	124.0 A
TRANSFER PUMP NO. 9	52.0 A	52.0 A
DEGASIFIER BLOWER NO. 4	40.0 A	40.0 A
SCRUBBER PUMP NO. 6	11.0 A	11.0 A
SCRUBBER PUMP NO. 8	11.0 A	11.0 A
HIGH PRESSURE PUMP NO. 8	302.0 A	179.0 A
HIGH PRESSURE PUMP NO. 9 (STANDBY)*	302.0 A	0.0 A
TOTAL	842.0 A	417.0 A
25% LARGEST MOTOR	75.2 A	
SERVICE TOTAL	917.2 A	
KVA @480V, 3PH	762.5 KVA	346.7 KVA

NOTE: CL = CONNECTED LOD
RL = RUNNING LOAD

*NO NEW DEMAND LOAD ADDED AS A RESULT OF THIS PROJECT. HPP-9 IS AN INSTALLED STANDBY, IT DOES NOT OPERATE UNLESS ANOTHER HIGH PRESSURE PUMP OF EQUIVALENT HORSEPOWER IS OUT OF SERVICE.

KEYED NOTES:

1. CONTRACTOR SHALL UTILIZE EXISTING SECTION IN MCC-1002 FOR NEW HPP-9 VFD. FURNISH ALL LABOR AND MATERIALS REQUIRED FOR A FULLY FUNCTIONAL VFD SECTION COMPLETE IN PLACE.
2. EXISTING MCC-1002 IS SQUARE D MODEL 6, FRONT ACCESS ONLY. ALL MODIFICATIONS SHALL MAINTAIN UL LISTING OF THE MCC ASSEMBLY.
3. EXISTING CONDUIT STUB LOCATED AT EQUIPMENT. CONTRACTOR SHALL EXTEND EXISTING CONDUIT AND TERMINATE ONTO NEW EQUIPMENT AS INDICATED IN DRAWINGS AND SPECIFICATIONS. FURNISH ALL LABOR AND MATERIALS FOR A WORKING HIGH PRESSURE PUMP SYSTEM COMPLETE IN PLACE.
4. VFD ASSEMBLY IS OWNER FURNISHED EQUIPMENT. THE VILLAGE SHALL NOT BE RESPONSIBLE FOR COORDINATION OF SCHEDULING OF EQUIPMENT MANUFACTURER TO COMPLETE THE WORK SCOPE DEFINED HEREIN. THE CONTRACTOR SHALL BE RESPONSIBLE FOR ALL REVIEWING SHOP DRAWING SUBMITTALS, ADJUSTMENTS, COORDINATION AND INTEGRATION OF OWNER FURNISHED EQUIPMENT, INCLUDING SCHEDULING OF EQUIPMENT MANUFACTURER FOR INSTALLATION, TESTING, AND START-UP FOR A WORKING SYSTEM COMPLETE IN PLACE. REFER TO SPECIFICATIONS 16480 AND 16485 FOR ADDITIONAL REQUIREMENTS.

CONFORMED SET

NOT FOR CONSTRUCTION

HILLERS ELECTRICAL ENGINEERING, INC.
23257 STATE ROAD 7, SUITE 100
BOCA RATON, FLORIDA 33428
(561) 451-9165
(561) 451-4886 FAX
LICENSE NO: EB 0006877

VERIFY SCALES
BAR IS ONE INCH ON ORIGINAL DRAWING
0 1"
IF NOT ONE INCH ON THIS SHEET, ADJUST SCALES ACCORDINGLY.

No.	REVISIONS	DATE	BY
1	CONTRACT MODIFICATIONS	10/16/24	BKH

Kimley»Horn
© 2023 KIMLEY-HORN AND ASSOCIATES, INC.
1920 WEKIVA WAY SUITE 200, WEST PALM BEACH, FL 33411
PHONE: 561-845-0665 FAX: 561-863-8175
WWW.KIMLEY-HORN.COM REGISTRY NO. 696

KHA PROJECT 144957081
DATE MAY 2025
SCALE AS SHOWN
DESIGNED BY BKH
DRAWN BY BKH
CHECKED BY MEL

HIGH PRESSURE PUMP NO. 9 IMPROVEMENTS

PREPARED FOR

VILLAGE OF WELLINGTON

PALM BEACH COUNTY FLORIDA

LICENSED PROFESSIONAL
BRANDON K. HAAS
FLORIDA LICENSE NUMBER 85334
DATE:

MCC-1002 MODIFIED ONE-LINE DIAGRAM

SHEET NUMBER
E-4
13 OF 21

Plotted By:Brandon Haas Sheet Set:KHVB Wellington WTP HPP9 Improvements Layout:MCC-1002 MODIFIED ONE-LINE DIAGRAM Apr 30, 2025 01:53:11pm E:\PROJECTS\OA\OA126 wellington hpp9 improvements\Drawings\Electrical\OA126-E04.dwg
This document, together with the concepts and designs presented herein, as an instrument of service, is intended only for the specific purpose and client for which it was prepared. Reuse of and improper reliance on this document without written authorization and adaptation by Kimley-Horn and Associates, Inc. shall be without liability to Kimley-Horn and Associates, Inc.

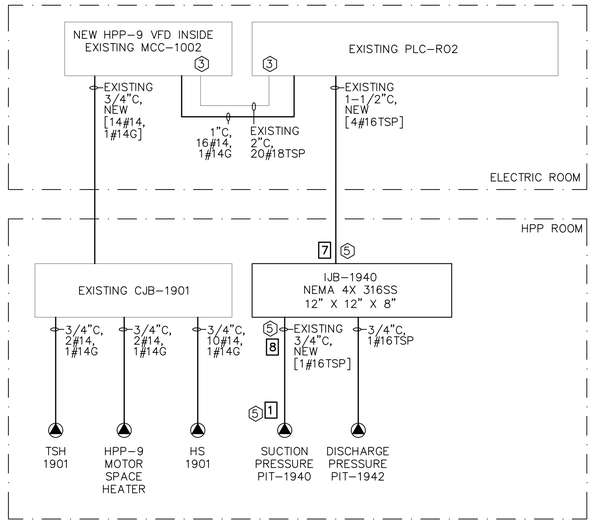

HIGH PRESSURE PUMP NO. 9 INSTRUMENTATION AND CONTROL DIAGRAM

NOT TO SCALE

REFER TO NOTE 5

PHOTO 1 – EXISTING HPP-9 CONDUIT STUBS

NOT TO SCALE

PCPMOVRO2 CONNECTED LOAD SUMMARY 8

EXISTING CONNECTED LOAD	18.9 A
NEW CONNECTED LOAD	6.3 A
CONNECTED LOAD TOTAL	25.2 A
25% LARGEST MOTOR	0.6 A
MINIMUM REQ. AMPACITY	25.8 A
KVA, 480V, 3-PH	21.4 KVA
EXISTING FEEDER AMPACITY-10 AWG	35.0 A

GENERAL NOTES:

1. REFER TO PLAN DRAWINGS FOR EQUIPMENT LOCATIONS.
2. PROVIDE PERMANENT LABELS FOR AND COIL SPARE WIRES IN JUNCTION BOXES THAT ARE ACCESSIBLE AT FINISHED FLOOR ELEVATION.
3. NOT ALL CONDUITS AND CABLES SHOWN. SEE OTHER PLAN DRAWINGS FOR ADDITIONAL CONDUITS AND CABLES.
4. BEFORE INSTALLATION, THE CONTRACTOR SHALL COORDINATE ALL CONDUIT REQUIREMENTS WITH INSTRUMENTATION CONTRACTOR AND MECHANICAL EQUIPMENT SUPPLIER DIVISION 11. IF REQUIRED FOR SPECIFIED FUNCTIONALITY, FURNISH AND INSTALL ADDITIONAL CONTROL WIRES AND ADJUST CONDUIT SIZE AT NO ADDITIONAL COST TO THE VILLAGE.
5. UTILIZE EXISTING CONDUITS STUBS AS IDENTIFIED IN THE CONDUIT STUB LEGEND TO COMPLETE CONDUIT RUNS BETWEEN EQUIPMENT SHOWN ON THE RISER DIAGRAMS.
6. TO THE EXTENT POSSIBLE, INSTALLATION OF NEW EQUIPMENT SHALL MATCH EXISTING INSTALLATIONS FOR FEED PUMPS 6, 7 AND 8.
7. CONDUITS WITHIN TRENCHES SHALL BE ROUTED AS TO NOT CREATE OBSTACLES OR OBSTRUCT EXISTING ACCESS TO EQUIPMENT. PROVIDE ADDITIONAL PULL POINTS AS REQUIRED BY FIELD ROUTING OF CONDUITS WITHIN TRENCHES. WHERE CONDUITS MUST TRAVERSE THE SPAN OF THE TRENCH, THEY SHALL BE SUPPORTED BY UNISTRUT MOUNTED TO TRENCH FLOOR.
8. CONDUIT ENTRIES FROM TOP OF ENCLOSURES NOT PERMITTED IN PIPING TRENCH.

KEYED NOTES:

1. DISCONNECTING MEANS FOR VALVE ELECTRIC ACTUATOR LOCATED INSIDE PANEL PCPMOVRO2.
2. FIELD VERIFY AND USE 2 EXISTING #16TSP WIRES TO INTERFACE NEW CONCENTRATE VALVE POSITION COMMAND AND FEEDBACK SIGNALS INTO EXISTING PLC-RO2.
3. SPARE SIGNAL AND CONTROL WIRES ARE BUNDLED AND COILED IN BOTTOM OF PANEL. FIELD VERIFY SPARES AND CONNECT NEW SIGNALS TO EXISTING TERMINAL BLOCKS. FURNISH AND INSTALL NEW TERMINAL BLOCKS IF NO SPARES ARE AVAIALBLE.
4. INTERCEPT EXISTING CV1X46 POWER CONDUIT ON TRENCH WALL AND INSTALL SPLICE JUNCTION BOX, EXTEND CONDUCTORS TO NEW VALVE. TYPICAL OF 3 (X=6,7,8)
5. INTERCEPT EXISTING CONDUIT STUB AND EXTEND TO NEW EQUIPMENT.
6. INTERFACE NEW CONCENTRATE VALVE CV-1X20 IN AUTO AND FAILED SIGNALS WITH EXISTING PCPMOVRO2. FIELD VERIFY AND SPLICE CONDUCTORS IN EXISTING 2-7/C#16 CABLES ASSOCIATED WITH CV-1X46. SPLICES SHALL BE MADE INSIDE CJB-1X43. LABEL WIRES WITH NEW SHRINK-WRAP MARKERS INDICATING TAG.
7. FIELD VERIFY AND USE EXISTING CV-1X46 OPEN AND CLOSE FEEDBACK SIGNAL WIRES BETWEEN PCPMOVRO2 AND PLC-RO2 FOR NEW CV-1X20 IN AUTO AND FAILED SIGNALS. LABEL WIRES WITH NEW SHRINK-WRAP MARKERS INDICATING TAG.
8. NEW VALVE ACTUATORS ARE RATED 1/8 HP AND INTERMITTENT DUTY.
9. FIELD MODIFY GRATING FOR CONDUIT ENTRIES, DEBURR ALL CUT EDGES. AT COMPLETION, GRATING SHALL BE REMOVABLE WITHOUT ALTERING CONDUITS.

CONDUIT STUB LEGEND:

1. 3/4"C TO CONDUIT STUB 8 FOR PIT-1940
2. 3/4"C TO VFD SECTION IN MCC-1002
3. 2"C TO VFD SECTION IN MCC-1002 FOR PUMP POWER
4. 2"C TO VFD SECTION IN MCC-1002 FOR PUMP POWER
5. 3/4"C TO VFD SECTION INC MCC-1002
6. EXISTING GROUNDING PIGTAIL FOR HPP-9
7. 1-1/2"C TO PLC-RO2
8. 3/4"C TO CONDUIT STUB 1 FOR PIT-1940
9. 3/4"C SPARE
10. SPARE
11. 3/4"C TO CONDUIT STUB 14
12. 3/4"C TO PCPMOVRO2
13. 1"C TO PLC-RO2
14. 3/4"C TO CONDUIT STUB 11
15. 1-1/2"C TO PLC-RO2

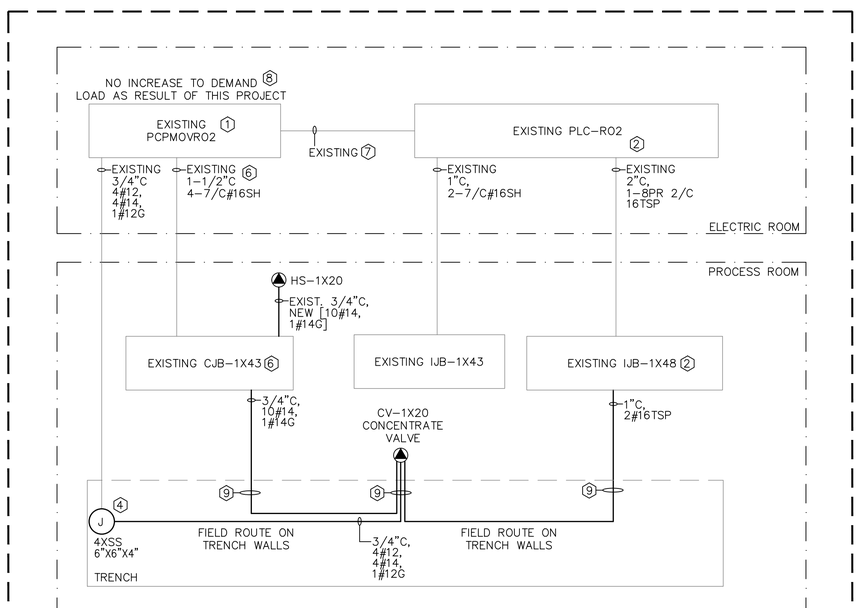

M2 CONCENTRATE VALVE INSTRUMENTATION AND CONTROL DIAGRAM

NOT TO SCALE

TYPICAL OF 3 X=6,7,8

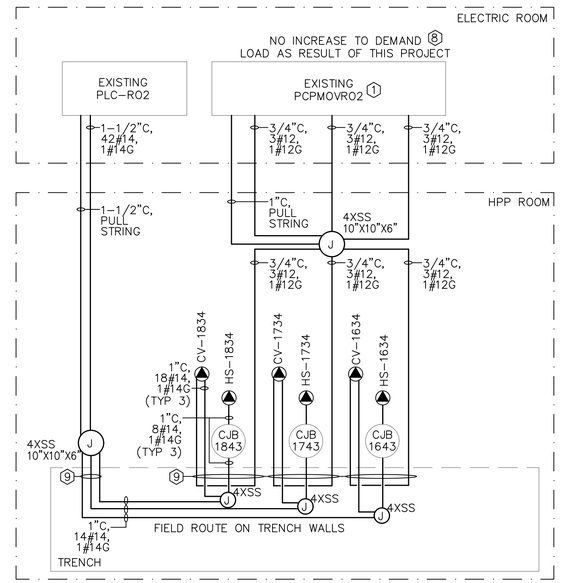

SWING VALVE ACTUATOR INSTRUMENTATION AND CONTROL DIAGRAM

REFER TO NOTE 7

NOT TO SCALE

LEGEND:

1 BID ALTERNATE ITEM #1

CONFORMED SET

NOT FOR CONSTRUCTION

HILLERS ELECTRICAL ENGINEERING, INC.
23257 STATE ROAD 7, SUITE 100
BOCA RATON, FLORIDA 33428
(561) 451-9165
(561) 451-4886 FAX
LICENSE NO: EB 0006877

VERIFY SCALES

BAR IS ONE INCH ON ORIGINAL DRAWING

0 1"

IF NOT ONE INCH ON THIS SHEET, ADJUST SCALES ACCORDINGLY.

No.	REVISIONS	DATE	BY
1	CONTRACT MODIFICATIONS	10/16/24	BKH

Kimley»Horn

© 2023 KIMLEY-HORN AND ASSOCIATES, INC.

1920 WEKIVA WAY SUITE 200, WEST PALM BEACH, FL 33411
PHONE: 561-845-0665 FAX: 561-863-8175
WWW.KIMLEY-HORN.COM REGISTRY NO. 696

KHA PROJECT	144957081
DATE	MAY 2025
SCALE	AS SHOWN
DESIGNED BY	BKH
DRAWN BY	BKH
CHECKED BY	MEL

HIGH PRESSURE PUMP NO. 9 IMPROVEMENTS

PREPARED FOR

VILLAGE OF WELLINGTON

PALM BEACH COUNTY FLORIDA

BRANDON HAAS LICENSE No 85334 STATE OF FLORIDA PROFESSIONAL ENGINEER

This item has been digitally signed and sealed by on the date adjacent to the seal.

The signature must be verified on any electronic copies.

ELECTRICAL RISER DIAGRAMS AND SCHEDULES

SHEET NUMBER

E-5

14 OF 21

This document, together with the concepts and designs presented herein, as an instrument of service, is intended only for the specific purpose and client for which it was prepared. Reuse of and improper reliance on this document without written authorization and adaptation by Kimley-Horn and Associates, Inc. shall be without liability to Kimley-Horn and Associates, Inc.

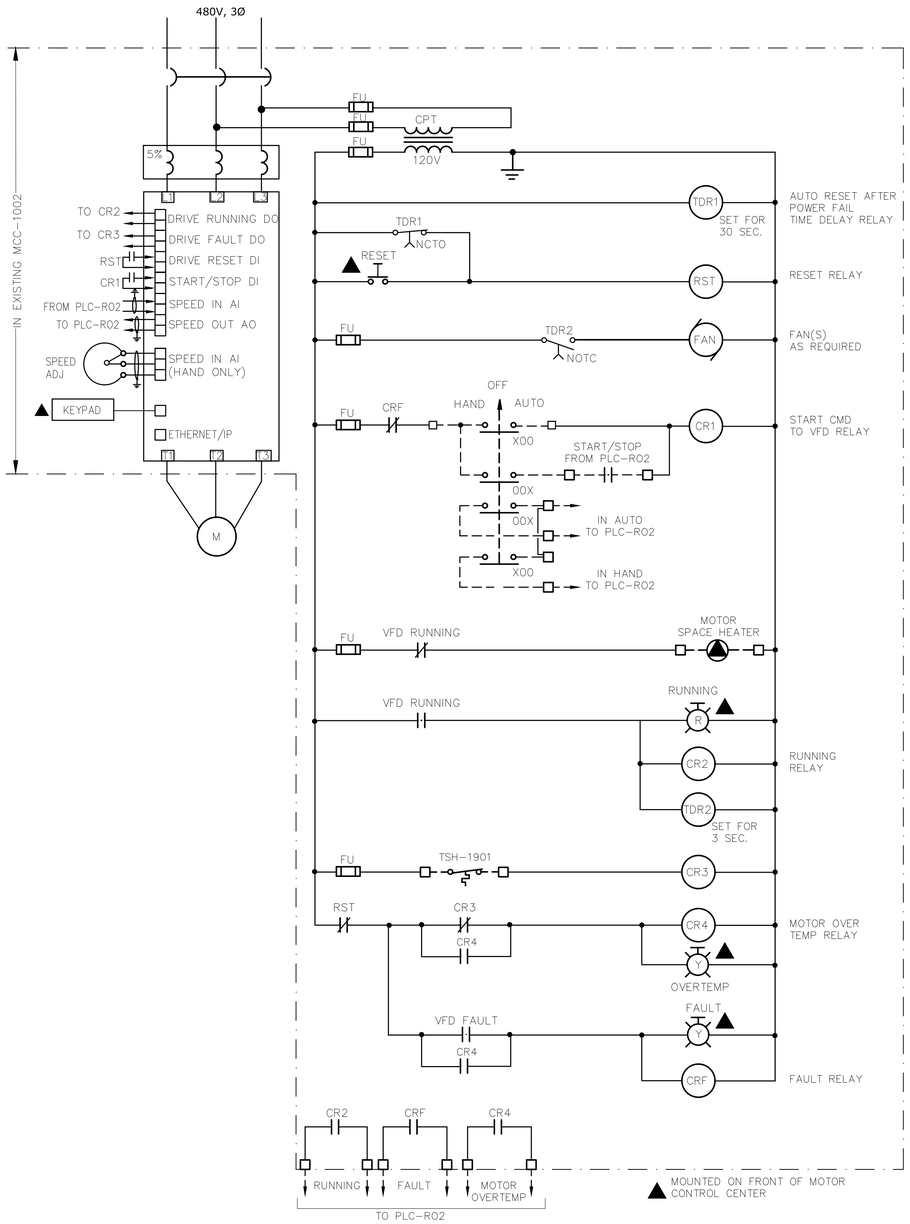

HIGH PRESSURE PUMP NO. 9 (HHP-9) SCHEMATIC DIAGRAM 1

NOT TO SCALE

KEYED NOTES:

1. VFD ASSEMBLY IS OWNER FURNISHED EQUIPMENT. THE VILLAGE SHALL NOT BE RESPONSIBLE FOR COORDINATION OF SCHEDULING OF EQUIPMENT MANUFACTURER TO COMPLETE THE WORK SCOPE DEFINED HEREIN. THE CONTRACTOR SHALL BE RESPONSIBLE FOR ALL REVIEWING SHOP DRAWING SUBMITTALS, ADJUSTMENTS, COORDINATION AND INTEGRATION OF OWNER FURNISHED EQUIPMENT, INCLUDING SCHEDULING OF EQUIPMENT MANUFACTURER FOR INSTALLATION, TESTING, AND START-UP FOR A WORKING SYSTEM COMPLETE IN PLACE. REFER TO SPECIFICATIONS 16480 AND 16485 FOR ADDITIONAL REQUIREMENTS.

CONFORMED SET

NOT FOR CONSTRUCTION

HILLERS ELECTRICAL ENGINEERING, INC.
23257 STATE ROAD 7, SUITE 100
BOCA RATON, FLORIDA 33428
(561) 451-9165
(561) 451-4886 FAX
LICENSE NO: EB 0006877

VERIFY SCALES
BAR IS ONE INCH ON ORIGINAL DRAWING
0 1"
IF NOT ONE INCH ON THIS SHEET, ADJUST SCALES ACCORDINGLY.

No.	REVISIONS	DATE	BY
1	CONTRACT MODIFICATIONS	10/16/24	BKH

Kimley»Horn

© 2023 KIMLEY-HORN AND ASSOCIATES, INC.
1920 WEKIVA WAY SUITE 200, WEST PALM BEACH, FL 33411
PHONE: 561-845-0665 FAX: 561-863-8175
WWW.KIMLEY-HORN.COM REGISTRY NO. 696

KHA PROJECT	144957081
DATE	MAY 2025
SCALE	AS SHOWN
DESIGNED BY	BKH
DRAWN BY	BKH
CHECKED BY	MEL

HIGH PRESSURE PUMP NO. 9 IMPROVEMENTS

PREPARED FOR

VILLAGE OF WELLINGTON

PALM BEACH COUNTY FLORIDA

BRANDON HAAS LICENSE No 85334 STATE OF FLORIDA PROFESSIONAL ENGINEER

This item has been digitally signed and sealed by on the date adjacent to the seal.

The signature must be verified on any electronic copies.

ELECTRICAL SCHEMATICS

SHEET NUMBER

E-6

15 OF 21

This document, together with the concepts and designs presented herein, as an instrument of service, is intended only for the specific purpose and client for which it was prepared. Reuse of and improper reliance on this document without written authorization and adaptation by Kimley-Horn and Associates, Inc. shall be without liability to Kimley-Horn and Associates, Inc.

Plotted By:Brandon Haas Sheet:Set-PH12B Wellington WTP HPP9 Improvements Layout:ELECTRICAL SCHEMATICS April 30, 2025 01:53:16pm E:\PROJECTS\PALM\126 wellington hpp9 improvements\Drawings\Electrical\PH12B-E06.dwg

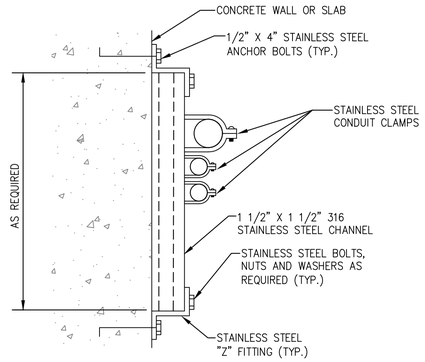

1 STD. CONDUIT SUPPORT
NOT TO SCALE

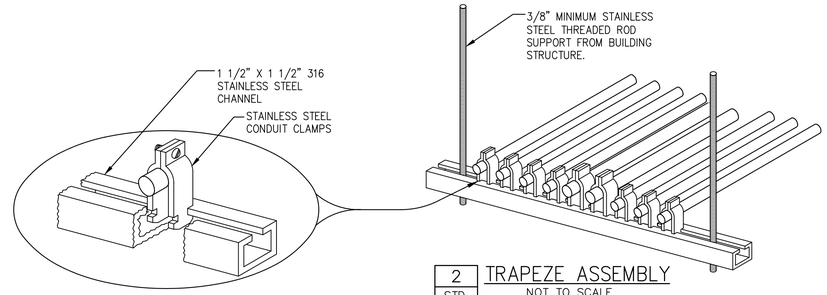

CONDUIT PIPE STRAP MOUNTING DETAILS

2 STD. TRAPEZE ASSEMBLY
NOT TO SCALE

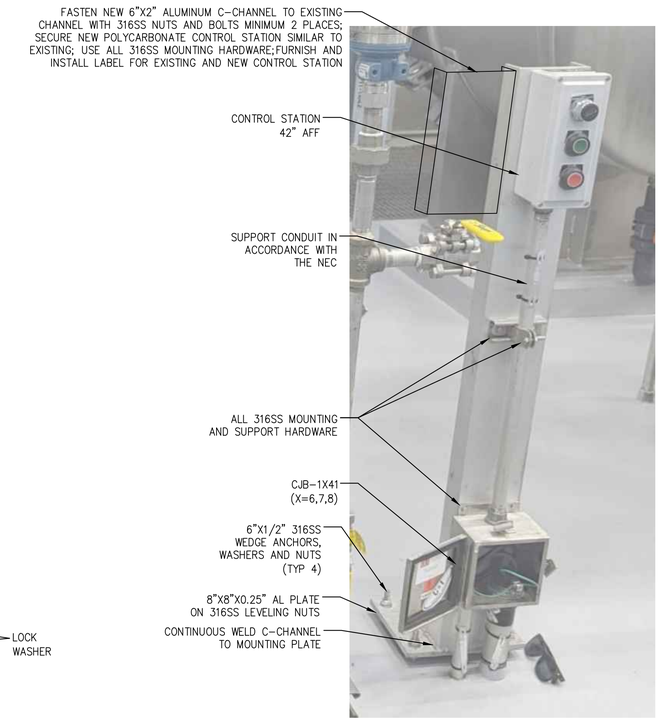

6 E-3 HPP6, 7 AND 8 CV CONTROL STATION
NOT TO SCALE

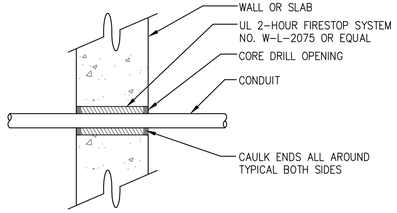

3 STD. CONDUIT PENETRATION AT WALL OR SLAB
NOT TO SCALE

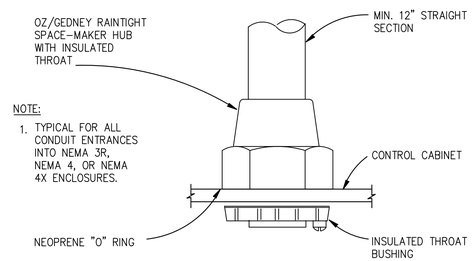

NOTE:
1. TYPICAL FOR ALL CONDUIT ENTRANCES INTO NEMA 3R, NEMA 4, OR NEMA 4X ENCLOSURES.

4 STD. CONDUIT HUB
NOT TO SCALE

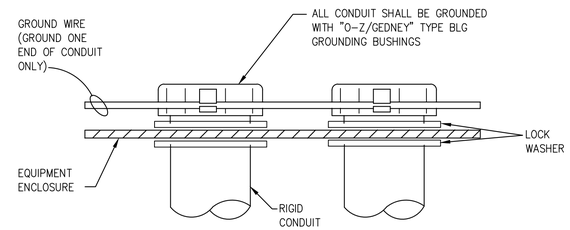

5 STD. CONDUIT GROUNDING
NOT TO SCALE

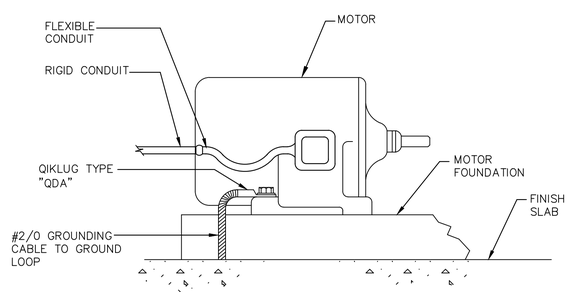

NOTE:
1. THIS GROUND IS IN ADDITION TO THE GROUND FROM THE MAIN ELECTRICAL SERVICE.
2. HORIZONTAL MOTOR SHOWN, ADJUST AS NECESSARY FOR VERICAL MOTORS.

7 STD TYPICAL EQUIPMENT GROUNDING DETAIL
NOT TO SCALE

NOTES:
1. INSTALL IN ACCORDANCE WITH MANUFACTURER'S INSTRUCTIONS
2. HORIZONTAL ARRANGEMENT SHOWN, ADJUST INSTALLATION AS REQUIRED FOR VERTICAL INSTALLATIONS

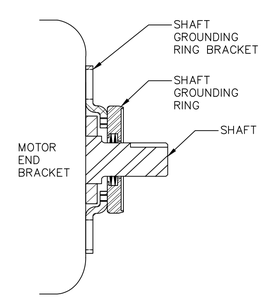

8 STD. SHAFT GROUNDING RING
NOT TO SCALE

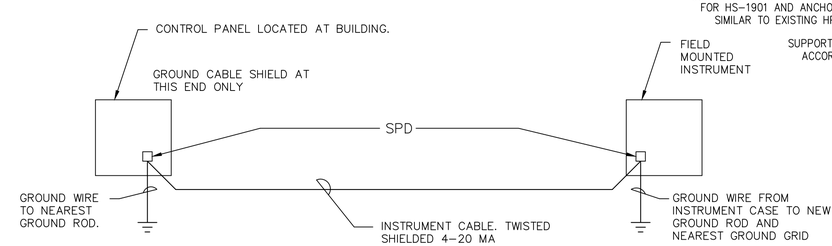

9 STD. INSTRUMENTATION GROUNDING & SURGE PROTECTION
NOT TO SCALE

HPP9 CONTROL STATION
NOTE: PICTURE IS OF EXISTING HPP8 STATION TO ILLUSTRATE THE MOUNTING REQUIREMENTS

10 E-3 HPP9 CONTROL STATION
NOT TO SCALE

CONFORMED SET

NOT FOR CONSTRUCTION

HILLERS ELECTRICAL ENGINEERING, INC.
23257 STATE ROAD 7, SUITE 100
BOCA RATON, FLORIDA 33428
(561) 451-9165
(561) 451-4886 FAX
LICENSE NO: EB 0006877

VERIFY SCALES
BAR IS ONE INCH ON ORIGINAL DRAWING
0 1"
IF NOT ONE INCH ON THIS SHEET, ADJUST SCALES ACCORDINGLY.

No.	REVISIONS	DATE	BY
1	CONTRACT MODIFICATIONS	10/16/24	BKH

Kimley»Horn
© 2023 KIMLEY-HORN AND ASSOCIATES, INC.
1920 WEKIVA WAY SUITE 200, WEST PALM BEACH, FL 33411
PHONE: 561-845-0665 FAX: 561-863-8175
WWW.KIMLEY-HORN.COM REGISTRY NO. 696

KHA PROJECT 144957081
DATE MAY 2025
SCALE AS SHOWN
DESIGNED BY BKH
DRAWN BY BKH
CHECKED BY MEL

HIGH PRESSURE PUMP NO. 9 IMPROVEMENTS
PREPARED FOR
VILLAGE OF WELLINGTON
PALM BEACH COUNTY FLORIDA

BRANDON HAAS LICENSE No 85334 STATE OF FLORIDA PROFESSIONAL ENGINEER

This item has been digitally signed and sealed by
BRANDON HAAS
on the date adjacent to the seal.
The signature must be verified on any electronic copies.

ELECTRICAL STANDARD DETAILS

SHEET NUMBER
E-7
16 OF 21

Plotted By:Brandon Haas Sheet: Set-HPP8 Wellington WTP HPP9 Improvements Layout:ELECTRICAL STANDARD DETAILS Apr 30, 2025 01:52:21pm E:\PROJECTS\VAH\128 wellington hpp9 improvements\Drawings\Electrical\Vah128_E07.dwg
This document, together with the concepts and designs presented herein, as an instrument of service, is intended only for the specific purpose and client for which it was prepared. Reuse of and improper reliance on this document without written authorization and adaptation by Kimley-Horn and Associates, Inc. shall be without liability to Kimley-Horn and Associates, Inc.

INSTRUMENT SOCIETY OF AMERICA TABLE

LETTER	FIRST LETTER: PROCESS OR INITIATING VARIABLE	FIRST LETTER: MODIFIER	SUCCEEDING LETTERS: READOUT OR PASSIVE FUNCTION	SUCCEEDING LETTERS: OUTPUT FUNCTION	SUCCEEDING LETTERS: MODIFIER
A	ANALYSIS (*)		ALARM		USERS CHOICE (*)
B	BURNER FLAME		USERS CHOICE (*)	USERS CHOICE (*)	
C	CONDUCTIVITY			CONTROL	CLOSE
D	DENSITY (S.G.)	DIFFERENTIAL			
E	VOLTAGE		PRIMARY ELEMENT		
F	FLOW RATE	RATIO			
G	GAUGE		GLASS	GATE	
H	HAND (MANUAL)				HIGH
I	CURRENT		INDICATE		
J	POWER	SCAN			
K	TIME OR SCHEDULE			CONTROL STATION	
L	LEVEL		LIGHT (PILOT)		LOW
M	MOTION				MIDDLE
N	STROKE		USERS CHOICE (*)	USERS CHOICE (*)	NORMAL
O	LOOP VEH. DETECTOR		OFFICE		OPEN
P	PRESSURE OR VACUUM		POINT (TEST CONNECTION)		
Q	QUANTITY OR EVENT		INTEGRATE		
R	RATIO		RECORD OR PRINT		
S	SPEED OR FREQUENCY	SAFETY		SWITCH	
T	TEMPERATURE			TRANSMIT	
U	MULTIVARIABLE (*)		MULTIFUNCTION (*)		
V	VIBRATION			VALVE	
W	WEIGHT OR FORCE		WELL		
X	UNCLASSIFIED (*)		UNCLASSIFIED (*)	UNCLASSIFIED (*)	UNCLASSIFIED (*)
Y	PHOTO CELL		LIGHT SOURCE	RELAY OR COMPUTE (*)	
Z	POSITION			DRIVE, ACTUATE OR UNCLASSIFIED FINAL CONTROL ELEMENT	

(*) WHEN USED, EXPLANATION IS SHOWN ADJACENT TO INSTRUMENT SYMBOL

INSTRUMENT IDENTIFICATION

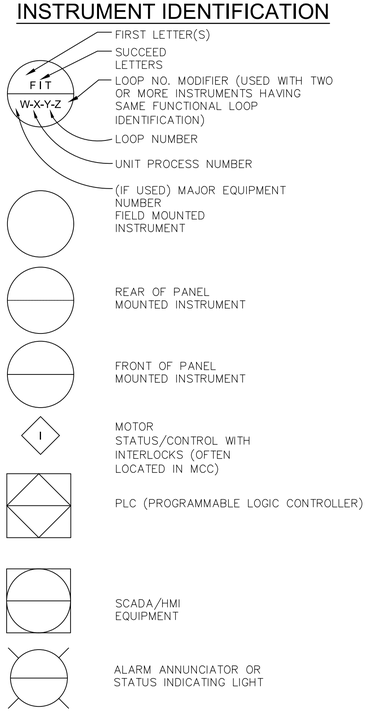

NOTES:

1. COMPONENTS AND PANELS SHOWN WITH A DIAMOND (◆) ARE TO BE PROVIDED UNDER SECTION "INSTRUMENTATION & CONTROLS".
2. COMPONENTS AND PANELS SHOWN WITH A DOUBLE ASTERISK (**) ARE TO BE PROVIDED AS PART OF A PACKAGED OR MECHANICAL SYSTEM.
3. COMPONENTS AND PANELS SHOWN WITH A TRIANGLE (▲) ARE EXISTING. COMPONENTS AND PANELS WHICH HAVE NO SYMBOL ATTACHED TO IT ARE EXISTING.
4. COMPONENTS AND PANELS SHOWN WITH A HEXAGON (⬢) ARE EXISTING TO BE MODIFIED AND/OR RELOCATED.
5. COMPONENTS AND PANELS SHOWN WITH A SQUARE (■) ARE PROVIDED BY THE OWNER.
6. THE SINGLE INSTRUMENT & CONTROL SUPPLIER SHALL HAVE A U.L. APPROVED SHOP.
7. ALL PROCESS TUBING AND ISOLATION VALVES SHALL BE 1/4"– 316 S.S., UNLESS OTHERWISE NOTED.
8. ALL CONTROL PANELS SHALL BE FURNISHED AND INSTALLED WITH A 1P–15A CIRCUIT BREAKER, UNLESS OTHERWISE NOTED.
9. SEE MECHANICAL PLANS AND SPECIFICATIONS FOR EQUIPMENT NUMBERS.
10. SUNSHIELD SHALL BE PROVIDED FOR ALL OUTDOOR INSTRUMENTS.

INSTRUMENT LINE SYMBOLS

- PRIMARY PROCESS FLOW
- FUTURE PRIMARY PROCESS FLOW
- SECONDARY PROCESS FLOW, CONNECTION TO PROCESS FLOW, MECHANICAL LINK OR INSTRUMENT SUPPLY
- ELECTRICAL SIGNAL (DISCRETE)
- A — ELECTRICAL SIGNAL (ANALOG)
- PNEUMATIC SIGNAL
- FIBER OPTIC
- X — PROCESS OR SIGNAL CONTINUED SOMEWHERE ELSE (X=1,2,3,...)
- ETHERNET

INSTRUMENT ABBREVIATION

ACC	ACCELATOR
BFP	BELT FILTER PRESS
CL2	CHLORINE
CLW	CLEARWELL
COM	COMMON
COND	CONDUCTIVITY
CP	CONTROL PANEL
DI, AI	DISCRETE INPUT, ANALOG INPUT
DO, AO	DISCRETE OUTPUT, ANALOG OUTPUT
D.O.	DISSOLVED OXYGEN
DR	DISTANCE RELAY
EFFL	EFFLUENT
EP	ELECTRICAL PANEL
ES	EMERGENCY STOP
ETM	ELAPSED TIME METER
FD	CHEMICAL FEEDER
FIL	FILTER
GEN	GENERATOR
HLO	HIGH-LOW-OFF
HLOR	HIGH-LOW-OFF-REMOTE
HOA	HAND-OFF-AUTO
HOR	HAND-OFF-REMOTE
HOTC	HAND-OFF-TIMER-COMPUTER
H/L	HIGH/LOW
HSP	HIGH SERVICE PUMP
INFL	INFLUENT
JP	JOCKEY PUMP
LOS	LOCK-OUT-STOP
LPU	LINE PROTECTION UNIT
MCC	MOTOR CONTROL CENTER
MCP	MAIN CONTROL PANEL
ME	MISCELLANEOUS EQUIPMENT
M.G.	MILLION GALLON
MOD.	MODULATING VALVE
MOV	MOTOR OPERATED VALVE
OCA	OPEN-CLOSE-AUTO
OC, O/C	OPEN-CLOSE
OO	ON-OFF
ORP	OXIDATION REDUCTION POTENTIAL
OSC	OPEN-STOP-CLOSE
OSCR	OPEN-STOP-CLOSE-REMOTE
PH	HYDROGEN ION CONCENTRATION
PRES	PRESSURE
RES	RESTORE
RF	RF (ADMITTANCE) LEVEL MONITOR
RIP, RIO	REMOTE I/O PANEL
R/L	REMOTE/LOCAL
RSP	REMOTE SETPOINT
SA	SURGE ARRESTER
SEC	SECONDARY
SL	SLAKER
SF	SONIC FLOWMETER
SP	SETPOINT
SS	START/STOP
ST	STEP
STOR	STORAGE
SUS	SUSPENDED SOLIDS
SSRVS	SOLID STATE REDUCED VOLTAGE STARTER
TD	THERMAL DISPERSION
TP	TRANSFER PUMP
TURB	TURBIDITY
VFD	VARIABLE FREQUENCY DRIVE

INSTRUMENTATION LEGEND

PUMPS & COMPRESSORS

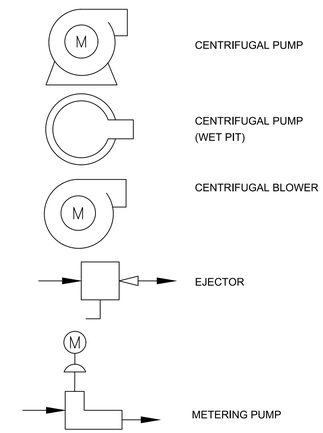

VALVES & GATES

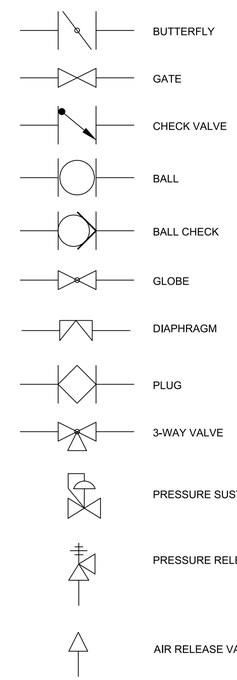

ACTUATOR OR OPERATORS

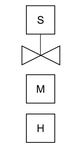

PRIMARY ELEMENTS

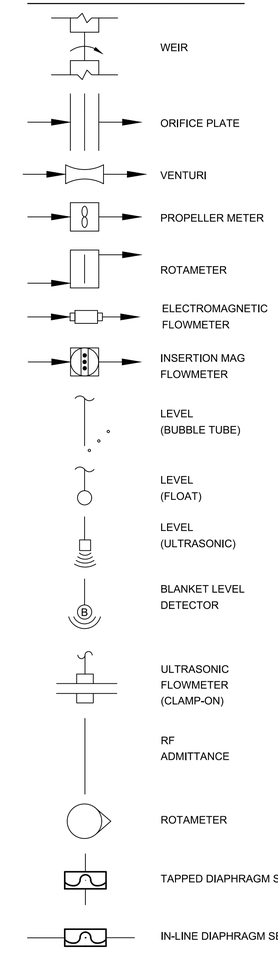

CONFORMED SET

NOT FOR CONSTRUCTION

HILLERS ELECTRICAL ENGINEERING, INC.
23257 STATE ROAD 7, SUITE 100
BOCA RATON, FLORIDA 33428
(561) 451–9165
(561) 451–4886 FAX
LICENSE NO: EB 0006877

VERIFY SCALES
BAR IS ONE INCH ON ORIGINAL DRAWING
0 1"
IF NOT ONE INCH ON THIS SHEET, ADJUST SCALES ACCORDINGLY.

No.	REVISIONS	DATE	BY
1	CONTRACT MODIFICATIONS	10/16/24	BKH

Kimley»Horn
© 2023 KIMLEY–HORN AND ASSOCIATES, INC.
1920 WEKIVA WAY SUITE 200, WEST PALM BEACH, FL 33411
PHONE: 561–845–0665 FAX: 561–863–8175
WWW.KIMLEY–HORN.COM REGISTRY NO. 696

KHA PROJECT 144957081
DATE MAY 2025
SCALE AS SHOWN
DESIGNED BY BKH
DRAWN BY BKH
CHECKED BY MEL

HIGH PRESSURE PUMP NO. 9 IMPROVEMENTS

PREPARED FOR

VILLAGE OF WELLINGTON

PALM BEACH COUNTY FLORIDA

BRANDON HAAS LICENSE No 85334 STATE OF FLORIDA PROFESSIONAL ENGINEER

This item has been digitally signed and sealed by on the date adjacent to the seal.

The signature must be verified on any electronic copies.

INSTRUMENTATION LEGEND & SYMBOLS

SHEET NUMBER

I-1

17 OF 21

This document, together with the concepts and designs presented herein, as an instrument of service, is intended only for the specific purpose and client for which it was prepared. Reuse of and improper reliance on this document without written authorization and adaptation by Kimley-Horn and Associates, Inc. shall be without liability to Kimley-Horn and Associates, Inc.

Plotted By:Brandon Haas Sheet: S41-041.02 Wellington WTP HPP9 Improvements Layout:INSTRUMENTATION LEGEND & SYMBOLS Apr 30, 2025 01:52:52pm E:\PROJECTS\WVA\WA126 wellington hpp9 improvements\Drawings\Instrumentation\WA126-I01.dwg

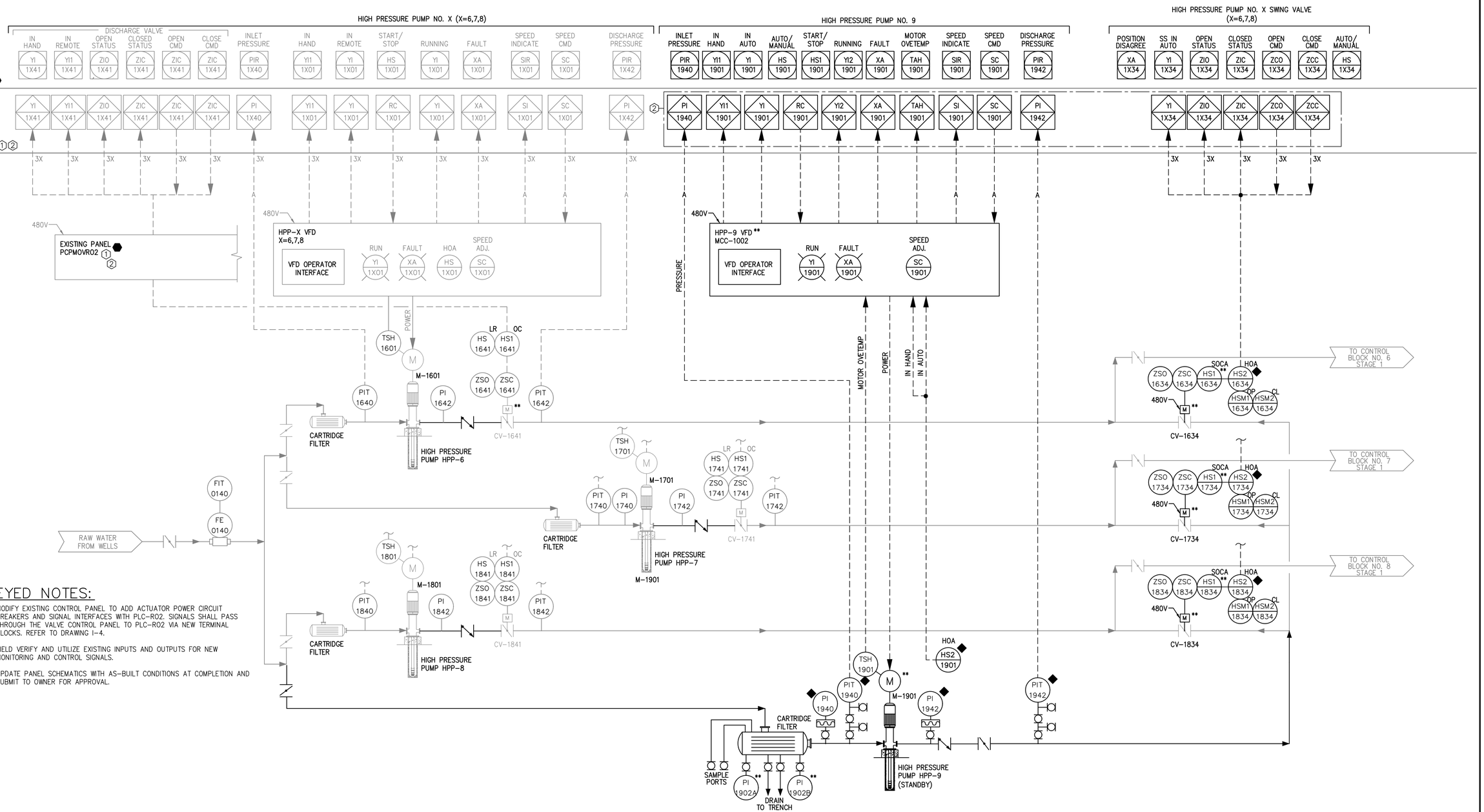

KEYED NOTES:

1. MODIFY EXISTING CONTROL PANEL TO ADD ACTUATOR POWER CIRCUIT BREAKERS AND SIGNAL INTERFACES WITH PLC-RO2. SIGNALS SHALL PASS THROUGH THE VALVE CONTROL PANEL TO PLC-RO2 VIA NEW TERMINAL BLOCKS. REFER TO DRAWING I-4.
2. FIELD VERIFY AND UTILIZE EXISTING INPUTS AND OUTPUTS FOR NEW MONITORING AND CONTROL SIGNALS.
3. UPDATE PANEL SCHEMATICS WITH AS-BUILT CONDITIONS AT COMPLETION AND SUBMIT TO OWNER FOR APPROVAL.

M2 HIGH PRESSURE PUMP P&ID

NOT TO SCALE

CONFORMED SET

NOT FOR CONSTRUCTION

HILLERS ELECTRICAL ENGINEERING, INC.
23257 STATE ROAD 7, SUITE 100
BOCA RATON, FLORIDA 33428
(561) 451-9165
(561) 451-4886 FAX
LICENSE NO: EB 0006877

VERIFY SCALES

BAR IS ONE INCH ON ORIGINAL DRAWING

0 1"

IF NOT ONE INCH ON THIS SHEET, ADJUST SCALES ACCORDINGLY.

No.	REVISIONS	DATE	BY
1	CONTRACT MODIFICATIONS	10/16/24	BKH

Kimley»Horn

© 2023 KIMLEY-HORN AND ASSOCIATES, INC.

1920 WEKIVA WAY SUITE 200, WEST PALM BEACH, FL 33411
PHONE: 561-845-0665 FAX: 561-863-8175
WWW.KIMLEY-HORN.COM REGISTRY NO. 696

KHA PROJECT	144957081
DATE	MAY 2025
SCALE	AS SHOWN
DESIGNED BY	BKH
DRAWN BY	BKH
CHECKED BY	MEL

HIGH PRESSURE PUMP NO. 9 IMPROVEMENTS

PREPARED FOR

VILLAGE OF WELLINGTON

PALM BEACH COUNTY FLORIDA

BRANDON HAIS LICENSE No 85334 STATE OF FLORIDA PROFESSIONAL ENGINEER

This item has been digitally signed and sealed by

on the date adjacent to the seal.

The signature must be verified on any electronic copies.

MODIFIED HIGH PRESSURE PUMP P&ID

SHEET NUMBER

I-2

18 OF 21

Plotted By:Brandon Hais Sheet Set:H1R2 Wellington WTP HPP9 Improvements Layout:MODIFIED HIGH PRESSURE PUMP P&ID Apr 30, 2025 01:53:26pm E:\PROJECTS\KH\KH126 wellington hpp9 improvements\Drawings\Instrumentation\KH126-I02.dwg
This document, together with the concepts and designs presented herein, as an instrument of service, is intended only for the specific purpose and client for which it was prepared. Reuse of and improper reliance on this document without written authorization and adaptation by Kimley-Horn and Associates, Inc. shall be without liability to Kimley-Horn and Associates, Inc.

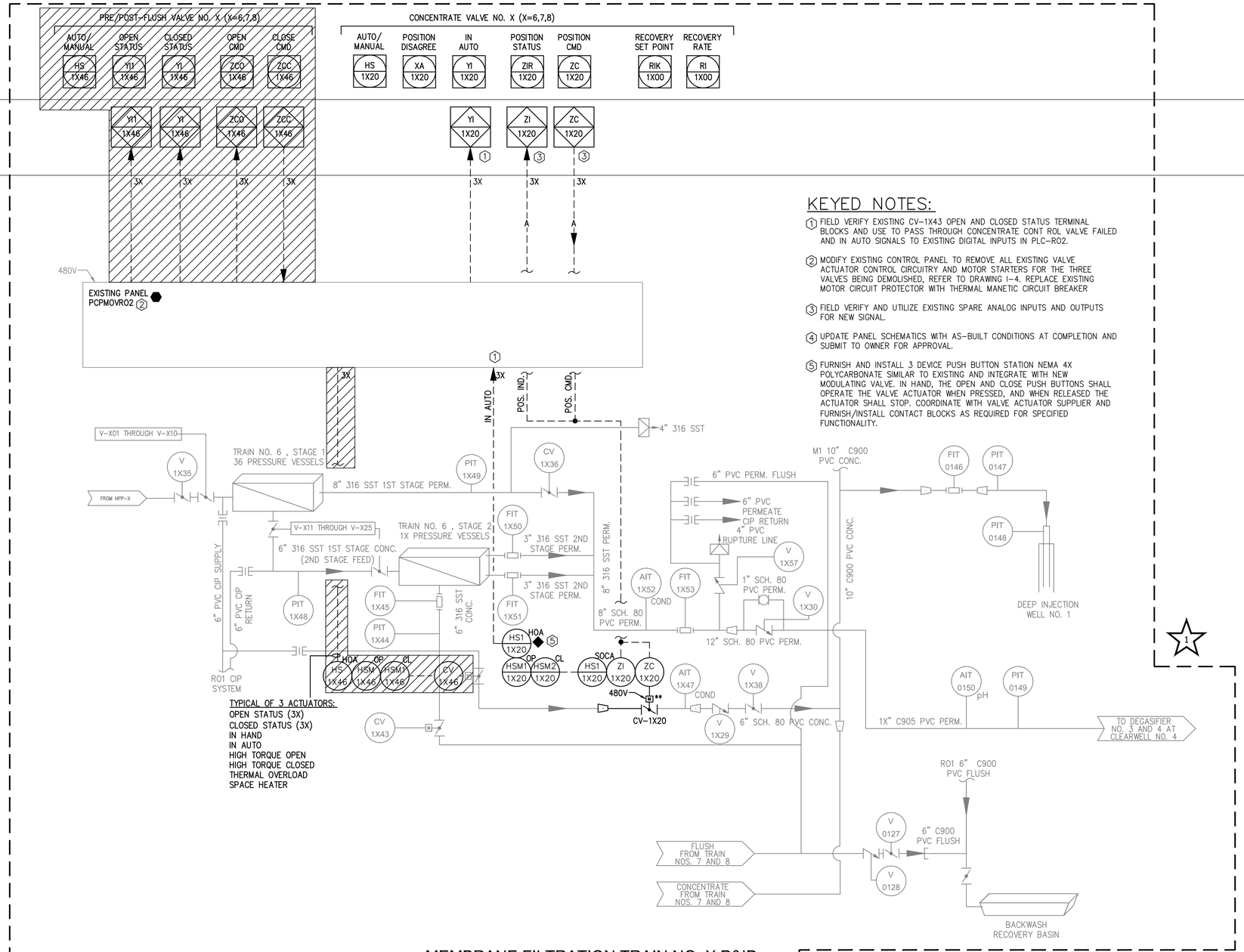

KEYED NOTES:

1. FIELD VERIFY EXISTING CV-1X43 OPEN AND CLOSED STATUS TERMINAL BLOCKS AND USE TO PASS THROUGH CONCENTRATE CONT ROL VALVE FAILED AND IN AUTO SIGNALS TO EXISTING DIGITAL INPUTS IN PLC-R02.
2. MODIFY EXISTING CONTROL PANEL TO REMOVE ALL EXISTING VALVE ACTUATOR CONTROL CIRCUITRY AND MOTOR STARTERS FOR THE THREE VALVES BEING DEMOLISHED, REFER TO DRAWING I-4. REPLACE EXISTING MOTOR CIRCUIT PROTECTOR WITH THERMAL MANETIC CIRCUIT BREAKER
3. FIELD VERIFY AND UTILIZE EXISTING SPARE ANALOG INPUTS AND OUTPUTS FOR NEW SIGNAL.
4. UPDATE PANEL SCHEMATICS WITH AS-BUILT CONDITIONS AT COMPLETION AND SUBMIT TO OWNER FOR APPROVAL.
5. FURNISH AND INSTALL 3 DEVICE PUSH BUTTON STATION NEMA 4X POLYCARBONATE SIMILAR TO EXISTING AND INTEGRATE WITH NEW MODULATING VALVE. IN HAND, THE OPEN AND CLOSE PUSH BUTTONS SHALL OPERATE THE VALVE ACTUATOR WHEN PRESSED, AND WHEN RELEASED THE ACTUATOR SHALL STOP. COORDINATE WITH VALVE ACTUATOR SUPPLIER AND FURNISH/INSTALL CONTACT BLOCKS AS REQUIRED FOR SPECIFIED FUNCTIONALITY.

MEMBRANE FILTRATION TRAIN NO. X P&ID

NOT TO SCALE (X=6,7,8)

LEGEND:

1 BID ALTERNATE ITEM #1

CONFORMED SET

NOT FOR CONSTRUCTION

HILLERS ELECTRICAL ENGINEERING, INC.
23257 STATE ROAD 7, SUITE 100
BOCA RATON, FLORIDA 33428
(561) 451-9165
(561) 451-4886 FAX
LICENSE NO: EB 0006877

VERIFY SCALES
BAR IS ONE INCH ON ORIGINAL DRAWING
0 1"
IF NOT ONE INCH ON THIS SHEET, ADJUST SCALES ACCORDINGLY.

No.	REVISIONS	DATE	BY
1	CONTRACT MODIFICATIONS	10/16/24	BKH

Kimley»Horn
© 2023 KIMLEY-HORN AND ASSOCIATES, INC.
1920 WEKIVA WAY SUITE 200, WEST PALM BEACH, FL 33411
PHONE: 561-845-0665 FAX: 561-863-8175
WWW.KIMLEY-HORN.COM REGISTRY NO. 696

KHA PROJECT 144957081
DATE MAY 2025
SCALE AS SHOWN
DESIGNED BY BKH
DRAWN BY BKH
CHECKED BY MEL

HIGH PRESSURE PUMP NO. 9 IMPROVEMENTS

PREPARED FOR

VILLAGE OF WELLINGTON

PALM BEACH COUNTY FLORIDA

BRANDON HAAS LICENSE No 85334 STATE OF FLORIDA PROFESSIONAL ENGINEER

This item has been digitally signed and sealed by

MODIFIED MEMBRANE TRAIN P&ID

on the date adjacent to the seal.

The signature must be verified on any electronic copies.

SHEET NUMBER

I-3

19 OF 21

Plotted By:Brandon Haas Sheet: S41-X41X2 Wellington WTP HPP9 Improvements Layout:MODIFIED MEMBRANE TRAIN P&ID April 30, 2025 01:53:30pm E:\PROJECTS\VOL\VOL29 wellington hpp9 improvements\Drawings\Instrumentation\X41X2-103.dwg
This document, together with the concepts and designs presented herein, as an instrument of service, is intended only for the specific purpose and client for which it was prepared. Reuse of and improper reliance on this document without written authorization and adaptation by Kimley-Horn and Associates, Inc. shall be without liability to Kimley-Horn and Associates, Inc.

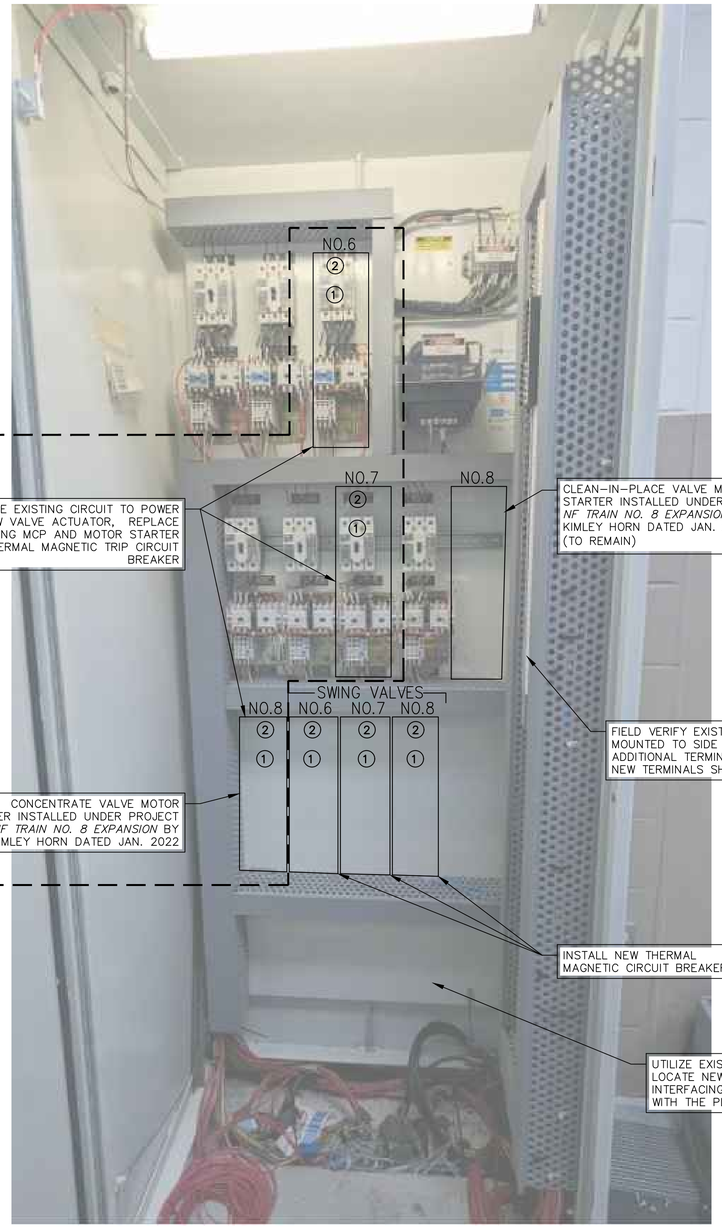

EXISTING PANEL PCPMOVRO2
NOT TO SCALE

CONTROL PANEL NOTES

1. ALL MODIFICATIONS SHALL BE PERFORMED BY A UL508A APPROVED PANEL BUILDER AND MAINTAIN THE UL LISTING OF THE CONTROL PANEL.
2. CONTRACTOR SHALL TURN OVER MOTOR STARTERS, CIRCUIT BREAKERS AND OVERLOADS TO VILLAGE AFTER REMOVAL.
3. FIELD VERIFY COMPONENTS AND CIRCUITS PRIOR TO DEMOLITION.
4. SUBMIT AN AS-BUILT DRAWING FOR REVISED PCPMOVRO2 SCHEMATIC AND LAYOUT AT COMPLETION OF FUNCTIONAL TESTS.

COMPONENT LEGEND

(1) EATON/CUTLER-HAMMER G-SERIES 20 AMP CONTINUOUS, 3-POLE, 480VAC, 22KAIC RATED, G-FRAME THERMAL MAGNETIC CIRCUIT BREAKER WITH PERMANENTLY INSTALLED PADLOCKABLE HANDLE.

(2) PERMANENTLY AFFIX NEW PHENOLIC TAG, BLACK BACKGROUND WITH WHITE TEXT TO MATCH EXISTING NAMEPLATES, FIELD VERIFY BEFORE ORDERING:

NO. X CONTROL BLOCK
VALVE NAME
CONTROL VALVE CV####

LEGEND:

- ☐ ITEMS LOCATED IN THE FIELD
- △ ITEMS LOCATED IN THE MOTOR CONTROL CENTERS
- ⬡ ITEMS LOCATED IN THE MAIN PLC AND I/O CONTROL PANEL PLCRO2
- [V] ITEMS IN THE MOTOR OPERATED VALVE (MOV) POWER AND CONTROL PANEL IN THE MCC ROOM FOR ALL R.O. PLANT MOV'S

1 BID ALTERNATE ITEM #1

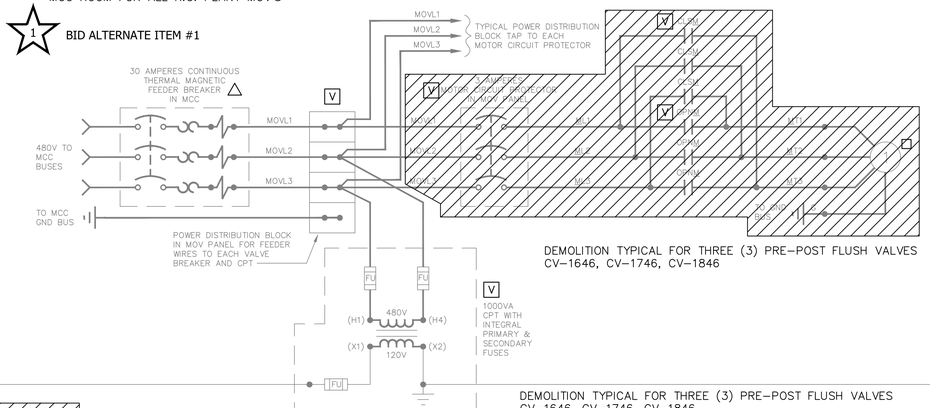

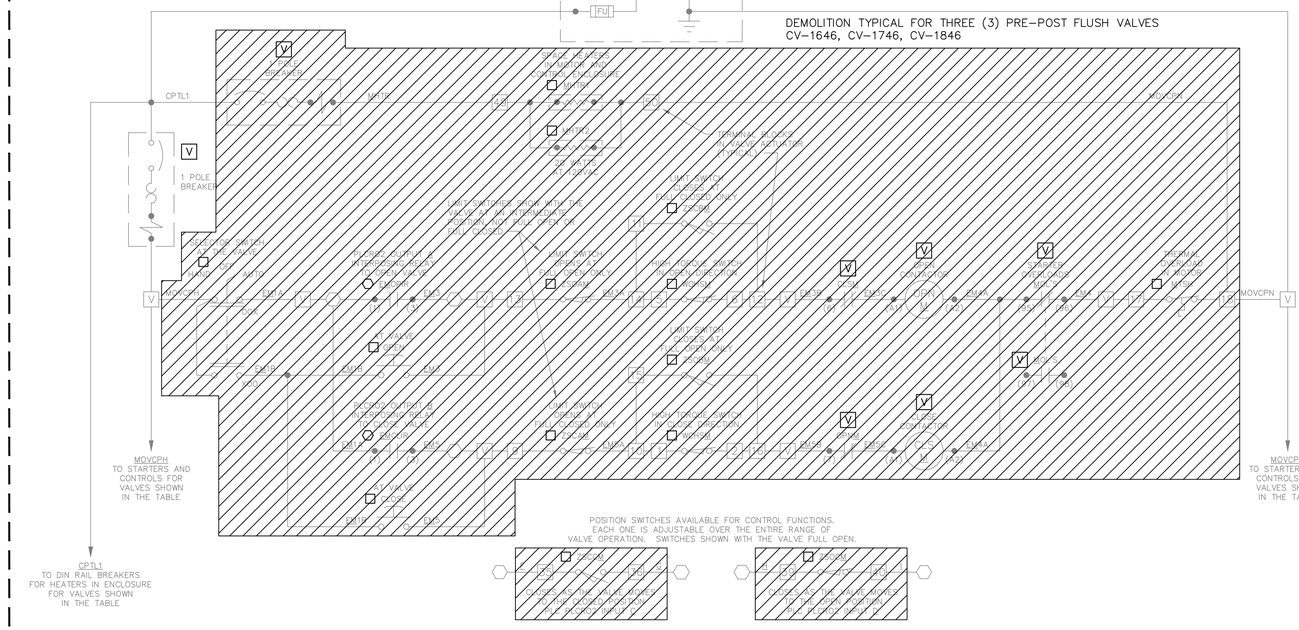

EXISTING PANEL PCPMOVRO2 SCHEMATIC
NOT TO SCALE

CONFORMED SET

NOT FOR CONSTRUCTION

HILLERS ELECTRICAL ENGINEERING, INC.
23257 STATE ROAD 7, SUITE 100
BOCA RATON, FLORIDA 33428
(561) 451-9165
(561) 451-4886 FAX
LICENSE NO: EB 0006877

VERIFY SCALES
BAR IS ONE INCH ON ORIGINAL DRAWING
0 — 1"
IF NOT ONE INCH ON THIS SHEET, ADJUST SCALES ACCORDINGLY.

No.	REVISIONS	DATE	BY
1	CONTRACT MODIFICATIONS	10/16/24	BKH

Kimley»Horn
© 2023 KIMLEY-HORN AND ASSOCIATES, INC.
1920 WEKIVA WAY SUITE 200, WEST PALM BEACH, FL 33411
PHONE: 561-845-0665 FAX: 561-863-8175
WWW.KIMLEY-HORN.COM REGISTRY NO. 696

KHA PROJECT 144957081
DATE MAY 2025
SCALE AS SHOWN
DESIGNED BY BKH
DRAWN BY BKH
CHECKED BY MEL

HIGH PRESSURE PUMP NO. 9 IMPROVEMENTS

PREPARED FOR

VILLAGE OF WELLINGTON

PALM BEACH COUNTY FLORIDA

BRANDON HAYS LICENSE No 85334 STATE OF FLORIDA PROFESSIONAL ENGINEER

This item has been digitally signed and sealed by on the date adjacent to the seal.

The signature must be verified on any electronic copies.

EXISTING PCPMOVRO2 MODIFICATION

SHEET NUMBER
I-4
20 OF 21

Plotted By:Brandon Hays Sheet Set:AHJ05 Wellington WTP HPP8 Improvements Layout:EXISTING PCPMOVRO2 MODIFICATION April 30, 2025 01:53:53pm E:\PROJECTS\VILLAGE wellington hpp8 improvements\Drawings\Instrumentation\KH1126-I04.dwg
This document, together with the concepts and designs presented herein, as an instrument of service, is intended only for the specific purpose and client for which it was prepared. Reuse of and improper reliance on this document without written authorization and adaptation by Kimley-Horn and Associates, Inc. shall be without liability to Kimley-Horn and Associates, Inc.

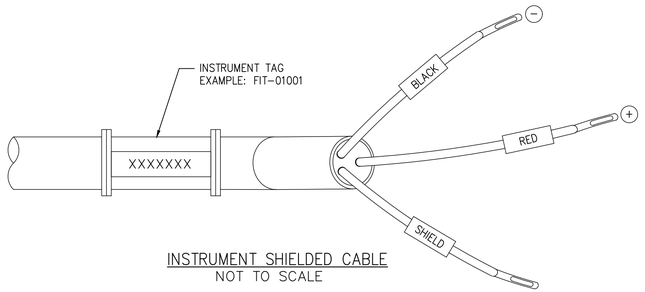

INSTRUMENT SHIELDED CABLE
NOT TO SCALE

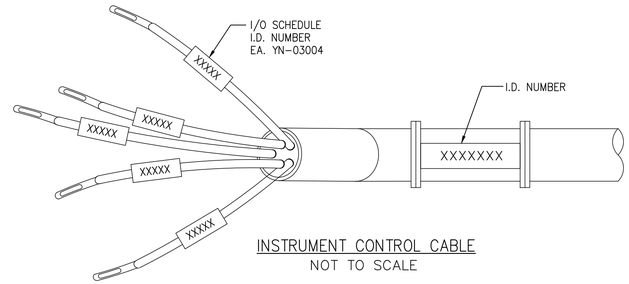

INSTRUMENT CONTROL CABLE
NOT TO SCALE

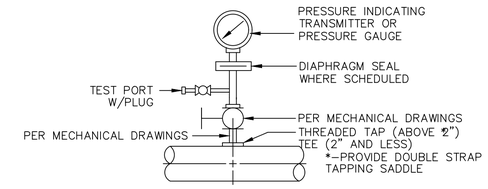

PRESSURE GAUGE, INSTRUMENT OR SWITCH
NOT TO SCALE

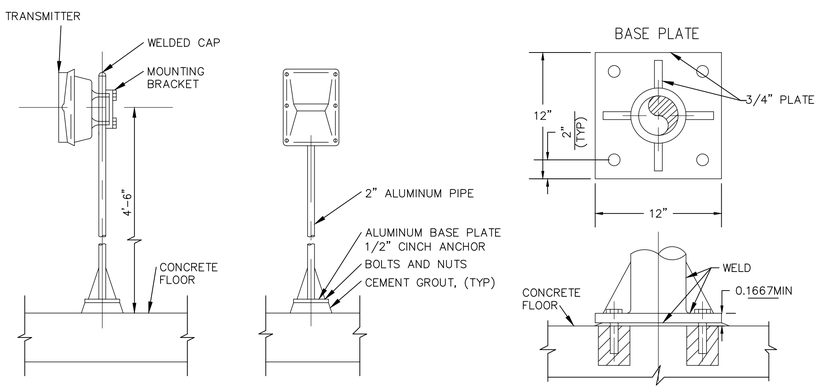

ELEVATIONS

PIPE STAND TRANSMITTER MOUNT
NOT TO SCALE

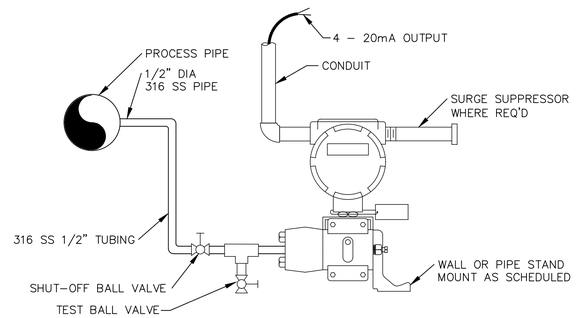

NOTES:
1. ALL PRESSURE TRANSMITTERS (PIT) SHALL BE INSTALLED AS IDENTIFIED ABOVE.
2. INSTRUMENT SHALL BE INSTALLED SO THAT AIR IS NOT ENTRAPPED WITHIN THE INSTRUMENT.
3. ALL BALL VALVES SHALL BE 316SS
4. ALL MOUNTING HARDWARE SHALL BE 316SS.
5. CONTRACTOR SHALL PROVIDE TAPPING SADDLES FOR PVC PIPE TAPS, WELDED THREAD-O-LETS FOR STAINLESS STEEL PIPE TAPS, AND THREADED BOSSES FOR DUCTILE IRON PIPE TAPS.

TYPICAL PRESSURE TRANSMITTER INSTALLATION
NOT TO SCALE

This document, together with the concepts and designs presented herein, as an instrument of service, is intended only for the specific purpose and client for which it was prepared. Reuse of and improper reliance on this document without written authorization and adaptation by Kimley-Horn and Associates, Inc. shall be without liability to Kimley-Horn and Associates, Inc.

CONFORMED SET

NOT FOR CONSTRUCTION

HILLERS ELECTRICAL ENGINEERING, INC.
23257 STATE ROAD 7, SUITE 100
BOCA RATON, FLORIDA 33428
(561) 451-9165
(561) 451-4886 FAX
LICENSE NO: EB 0006877

VERIFY SCALES
BAR IS ONE INCH ON ORIGINAL DRAWING
0 1"
IF NOT ONE INCH ON THIS SHEET, ADJUST SCALES ACCORDINGLY.

No.	REVISIONS	DATE	BY
1	CONTRACT MODIFICATIONS	10/16/24	BKH

Kimley»Horn
© 2023 KIMLEY-HORN AND ASSOCIATES, INC.
1920 WEKIVA WAY SUITE 200, WEST PALM BEACH, FL 33411
PHONE: 561-845-0665 FAX: 561-863-8175
WWW.KIMLEY-HORN.COM REGISTRY NO. 696

KHA PROJECT 144957081
DATE MAY 2025
SCALE AS SHOWN
DESIGNED BY BKH
DRAWN BY BKH
CHECKED BY MEL

HIGH PRESSURE PUMP NO. 9 IMPROVEMENTS

PREPARED FOR

VILLAGE OF WELLINGTON

PALM BEACH COUNTY FLORIDA

BRANDON HAAS LICENSE No 85334 STATE OF FLORIDA PROFESSIONAL ENGINEER

This item has been digitally signed and sealed by

on the date adjacent to the seal.

The signature must be verified on any electronic copies.

INSTRUMENTATION STANDARD DETAILS

SHEET NUMBER
I-5
21 OF 21

SECTION 3 – EXHIBIT R2 SCHEDULE OF VALUES

BASE BID

COST SUMMARY

Direct Costs	LABOR	EQUIPMENT	MATERIALS	SUBS	TOTALS
Total Direct Costs	$ -	$ -	$ -	$ 754,649	$ 754,649
Total GC's	$ 463,887	$ -	$ 74,151	$ 15,345	$ 553,383
Fee				$ 117,723	$ 117,723
Total for Direct Costs	**$ 463,887**	**$ -**	**$ 74,151**	**$ 887,717**	**$ 1,425,755**
Contingencies and Allowances	**LABOR**	**EQUIPMENT**	**MATERIALS**	**SUBS**	**TOTALS**
Owner Controlled Contingency (6.0% of Direct Costs)				$ 78,482	$ 78,482
Dedicated Allowances (see next sheet)				$ 175,000	$ 175,000
Total for Contingencies and Allowances	**$ -**	**$ -**	**$ -**	**$ 253,482**	**$ 253,482**

Bond and Insurance	LABOR	EQUIPMENT	MATERIALS	SUBS	TOTALS
Bond				$ 15,982	$ 15,982
Insurance				$ 8,996	$ 8,996
Total for Bond and Insurance	**$ -**	**$ -**	**$ -**	**$ 24,978**	**$ 24,978**

GMP TOTALS	**$ 463,887**	**$ -**	**$ 74,151**	**$ 1,166,177**	**$ 1,704,215**

VOW WTP Membrane Plant #2 (M2) High Pressure Pump 9 Improvements - BASED BID
GMP PROPOSAL
11/17/25

COST OF WORK

DESCRIPTION	QTY	UOM	LABOR $ AMOUNT	EQUIPMENT $ AMOUNT	MATERIALS $ AMOUNT	SUBS $ AMOUNT	$ TOTALS	COMMENTS
DIRECT COSTS							**$ 754,649**	
MECHANICAL INSTALL SUBCONTRACTOR	1	LS	$ -	$ -	$ -	$ 512,860	$ 512,860	Wharton Smith
INSTRUMENTATION SUBCONTRACTOR	1	LS	$ -	$ -	$ -	$ 77,889	$ 77,889	CC Control Corp
ELECTRICAL SUBCONTRACTOR	1	LS	$ -	$ -	$ -	$ 163,900	$ 163,900	Loveland Electric
DEDICATED ALLOWANCES							**$ 175,000**	
ALLOWANCE FOR COATINGS	1	LS	$ -	$ -	$ -	$ 35,000	$ 35,000	
ALLOWANCE FOR INDEPENDENT TESTING	1	LS	$ -	$ -	$ -	$ 10,000	$ 10,000	
ALLOWANCE FOR FLOW METER INSTALLATION	1	LS	$ -	$ -	$ -	$ 130,000	$ 130,000	
TOTAL DIRECT COST			**$ -**	**$ -**	**$ -**	**$ 799,649**	**$ 929,649**	

Wharton–Smith, Inc.
CONSTRUCTION GROUP

JOB NAME: VOW WTP Membrane Plant #2 (M2) HPP 9 Improvements - BASE
ESTIMATE #: 1

GENERAL CONDITIONS

1600 DIRECT MANHOURS | 40 MANWEEKS
DURATION = 5 MONTHS, PLANNED | 2 MEN

DESCRIPTION	QTY	UNIT	MH/ UNIT	BASE RATE	LABOR U/P	LABOR TOTAL MH	LABOR $ AMOUNT	HR/UNIT	EQUIPMENT RATE	EQUIPMENT $ AMOUNT	MATERIAL U/P	MATERIAL $ AMOUNT	MATERIAL $ AMOUNT	SUBCONTRACTS U/P	SUBCONTRACTS $ AMOUNT	$ TOTALS
PROJECT MANAGEMENT TEAM													W/ 7% TAX			
FIELD STAFF																
SUPERINTENDENT	22	WK	40	$157.00	$6,280	$866	$135,962			$0		$0	$0		$0	$135,962
OFFICE STAFF																
PROJECT MANAGER	22	WK	40	$157.00	$6,280	$866	$135,962			$0		$0	$0		$0	$135,962
PROJECT ENGINEER	22	WK	40	$96.00	$3,840	$866	$83,136			$0		$0	$0		$0	$83,136
PROJECT ASSISTANT	22	WK	24	$80.00	$1,920	$520	$41,568			$0		$0	$0		$0	$41,568
OTHER STAFF																
COST ACCOUNTANT	22	WK	16	$124.00	$1,984	$346	$42,954			$0		$0	$0		$0	$42,954
SAFETY COORDINATOR	22	WK	4	$140.00	$560	$87	$12,124			$0		$0	$0		$0	$12,124
RELATED MANAGEMENT COSTS																
SOFTWARE COSTS	1	LS		$50.00	$0	$0	$0			$0		$0	$0	$3,932	$3,932	$3,932
TEMP.FACILITIES & UTILITIES																
WATER, MONTHLY	5	MO		$50.00	$0	$0	$0			$0	$250	$1,250	$1,338		$0	$1,338
INTERNET/TELEPHONE, MONTHLY CHARGES - W-S	5	MO		$50.00	$0	$0	$0			$0	$200	$1,000	$1,070		$0	$1,070
CELLULAR TELEPHONE, MONTHLY CHARGES	5	MO		$50.00	$0	$0	$0			$0	$300	$1,500	$1,605		$0	$1,605
FIELD OFFICE, WHARTON SMITH INC	5	MO	5	$50.00	$250	$25	$1,250			$0	$8,000	$40,000	$42,800		$0	$44,050
JOB OFFICE SUPPLIES	5	MO		$50.00	$0	$0	$0			$0	$750	$3,750	$4,013		$0	$4,013
COMPUTER EQUIPMENT FOR FIELD OFFICE - W-S	1	LS		$50.00	$0	$0	$0			$0	$2,000	$2,000	$2,140		$0	$2,140
TOOL TRAILERS - 1 REQUIRED	5	MO		$50.00	$0	$0	$0			$0	$250	$1,250	$1,338		$0	$1,338
TEMPORARY TOILETS - 1 REQUIRED	5	MO		$50.00	$0	$0	$0			$0	$150	$750	$803		$0	$803
TEMPORARY SEWAGE HOLDING TANKS - ENGINEER & W-S	5	MO		$50.00	$0	$0	$0			$0	$300	$1,500	$1,605		$0	$1,605
CONSTRUCTION EQUIPMENT & TOOLS																
SMALL TOOLS AND SUPPLIES	1	LS		$50.00	$0	$0	$0			$0	$4,800	$4,800	$5,136		$0	$5,136
SAFETY & HEALTH & HOUSEKEEPING																
SAFETY DEVICES	1	LS		$50.00	$0	$0	$0			$0	$3,000	$3,000	$3,210		$0	$3,210
CLEAN-UP AT END OF PROJECT	1	LS	80	$50.00	$4,000	$80	$4,000			$0		$0	$0		$0	$4,000
CLEAN-UP THROUGHOUT DURATION OF PROJECT	22	WK	4	$50.00	$200	$87	$4,330			$0		$0	$0		$0	$4,330
DUMPSTERS	5	MO		$50.00	$0	$0	$0			$0	$1,250	$6,250	$6,688		$0	$6,688
JANITORIAL	22	WK		$50.00	$0	$0	$0			$0		$0	$0	$280	$6,062	$6,062
TOTAL GENERAL CONDITIONS						$3,742	$461,287			$0			$71,744		$9,994	**$543,023**

GENERAL REQUIREMENTS

PERMITS, FEES, INSURANCE, LEGAL, ETC.																
BUILDER'S RISK INSURANCE-COASTAL COUNTY	5	MO		$50.00	$0	$0	$0			$0		$0	$0	$250	$2,850	$2,850
PROJECT DOCUMENTATION AND SERVICES																
PHOTOGRAPHS	5	MO		$50.00	$0	$0	$0			$0	$150	$750	$803		$0	$803
PRE-CONSTRUCTION AUDIO-VIDEO DOCUMENTATION	1	LS		$50.00	$0	$0	$0			$0		$0	$0	$2,500	$2,500	$2,500

Wharton–Smith, Inc.
CONSTRUCTION GROUP

										JOB NAME:	VOW WTP Membrane Plant #2 (M2) HPP 9 Improvements - BASE					
										ESTIMATE #:	1					
DESIGN SERVICES (CADD) - AS-BUILTS	1	LS	40	$65.00	$2,600	$40	$2,600			$0		$0	$0		$0	$2,600
PLANS & SPECIFICATIONS REPRODUCTION COSTS	1	LS		$50.00	$0	$0	$0			$0	$1,500	$1,500	$1,605		$0	$1,605
TOTAL GENERAL REQUIREMENTS						$40	$2,600			$0			$2,408		$5,351	**$10,358**

Subcontrator Bid Evaluation and Comparison Sheet

Trade Description:	**Master Plant Contractor**
Project Name:	**VOW WTP M2 High Pressure Pump 9 Improvements**
Owner:	**Village of Wellington**
Bid Date:	**Tuesday, October 28, 2025**

Scope Item Description		**Wharton-Smith** **Greg Williams** **561-748-5956**		**Lawrence Lee** **Geoff Schmidt** **561-578-7715**		**Florida Design Drilling** **Jeff Holst** **561-818-3228**		**N/A**
Base Bid Before Alternates		**$ 512,860.00**		**NO BID**		**NO BID**		
Base Bid - HPP 9 Install, HPP 6, 7, 8 Mods.		$ 512,860.00						
Alternates								
Bid Alternate - Concentrate Pipe Mods.		$ 149,703.00						
Bid Document Requirements								
Bid Form		N/A						
Clarifications / Exceptions		N/A						
Acknowledged Addenda		N/A						
Additional Notes								
Payment & Performance Bond Rate		N/A						
Submittal Package Lead Time		See Schedule						
Material Delivery		See Schedule						
SUBTOTAL:		$ 512,860.00		$ -		$ -		$ -
Bond:	0.00%		0.00%		0.00%	Excluded	0.00%	
Adjustment		None				None		
Total Adjusted Scope:		**$ 512,860.00**		**$ -**		**$ -**		**$ -**
		$ 512,860.00		**$ -**		**$ -**		

Recommend award to Wharton-Smith as the lowest responsive bidder.

Subcontrator Bid Evaluation and Comparison Sheet

Trade Description:	**Electrical**
Project Name:	**VOW WTP M2 High Pressure Pump 9 Improvements**
Owner:	**Village of Wellington**
Bid Date:	**Friday, August 29, 2025**

Scope Item Description		**Loveland Electric II** **Robert J. Loveland** **561-882-0401**		**N/A**		**N/A**		**N/A**
Base Bid Before Alternates		**$ 163,900.00**						
Base Bid		$ 161,000.00						
Payment & Performance Bond		$ 2,800.00						
Indemnification		$ 100.00						
Alternates								
Bid Alternate		$ 16,000.00						
Payment & Performance Bond		$ -						
Indemnification		$ -						
Bid Document Requirements								
Bid Form		Complete						
Clarifications / Exceptions		Noted in Proposal						
Acknowledged Addenda		Yes						
Additional Notes								
Payment & Performance Bond Rate		N/A						
Submittal Package Lead Time		8 weeks						
Material Delivery		30 weeks						
SUBTOTAL:		$ 163,900.00		$ -		$ -		$ -
Bond:	0.00%	Included	0.00%		0.00%	$ -	0.00%	
Adjustment		None						
Total Adjusted Scope:		**$ 163,900.00**		**$ -**		**$ -**		**$ -**
		$ 163,900.00		**$ -**		**$ -**		

Recommend award to Loveland Electric as the lowest responsive bidder.

To:	Wharton-Smith, Inc.	Project:	VOW WTP HSP #9
		Location:	1100 Wellington Trace
Attn:	Eliana Corie	Bid Date:	08/08/24 04/17/25 08/18/25

We are pleased to submit our scope and proposal for the above referenced project. Our electrical proposal includes all labor, material, and taxes, and is based and bid upon the electrical drawings as noted below.

Electrical wiring in accordance with the following:

I. Attachment A – Scope of Work
Attachment B – Scope Clarifications

II. Plans: E-1 thru E-7 Kimley Horn Dated March 2024

III. Specifications: Division 16000

IV. Addenda: 1

V. Duration: Proposal is based on 270 calendar day final completion.

VI. We propose to complete all work to furnish the required material, labor and supervision in accordance with National Electric Code for work indicated on the bid documents only. No provisions have been included in this proposal for design errors or omissions.

VII. Subcontract Agreement: AIA Document A101 or other mutually agreed upon document. Other documents may require further negotiations of terms and conditions.

VIII. Insurance: Based on Loveland Electric, Inc. standard certificate of insurance and coverage. Copy of certificate is available upon request.

IX. Market Conditions: This proposal is valid for one hundred eighty (180) days from this date. After this time we reserve the right to review our proposal and modify, if necessary, based on changing market conditions.

The price for the work described above including attachments will be as follows:

Base Bid:	**$161,000.00**
Alt-1 Base Bid (Not included in base bid):	**$ 16,000.00**
Bond premium not included in base bid:	**$ 2,800.00**

Thank you for the opportunity to submit this proposal. Should you require any additional information or clarifications, please do not hesitate to contact our office.

LOVELAND ELECTRIC II, LLC

Tim McMullen
Chief Estimator

1344 S. Killian Dr. Lake Park, FL 33403
561-882-0401 Fax 561-882-0555

Scope of Work - Attachment A

Project Name: **VOW WTP HSP #9**

Bid Date: **8/8/2024**

Not withstanding other provisions of the Bid Documents, this proposal is based upon:

No.	Description	Incl	Excl	NA	Comments
1	**Davis Bacon Wage Rates**		x		
2	Blueprinting & reproduction costs	x			
3	Temporary power for construction		x		
4	Utility installation fees, costs or deposits		x		
5	Electrical permit fees		x		
6	Inspections, approval and tests	x			
7	Submittals and shop drawings	x			
8	Record As-Built drawings	x			
9	Tools, equipment and transportation	x			
10	Material and personnel hoisting	x			
11	Garbage and debris removal	x			To on-site dumpster FBO
12	Hazardous waste disposal		x		
13	Electrical demolition	x			
14	Cutting and patching		x		
15	Excavation and backfill			x	Excludes soil testing
16	Import or export of fill dirt			x	Excludes soil testing
17	De-watering			x	
18	Cutting and patching of roads, drives, etc.			x	
19	Traffic control			x	
20	Concrete encasement			x	Excludes concrete lab testing
21	Housekeeping and equipment pads		x		
22	Concrete pole bases			x	
23	Plywood backboards			x	
24	Painting		x		Equipment touch up only
25	Roof penetrations and pitch pans			x	
26	Access panels			x	
No.	**Description**	**Incl**	**Excl**	**NA**	**Comments**

27	Special appliances			x	
28	Motor starters		x		
29	Motor disconnects		x		
30	HVAC control raceways		x		
31	Energy Management System		x		
32	Flow & tamper switches (by FP Contractor)		x		
33	Power connections to FBO equipment	x			
34	Field layout and trade coordination	x			
35	Electrical sleeves & fireproofing	x			
36	Electric Door Strikes and Installation		x		
37	FPL primary service		x		
38	Secondary service entrance		x		
39	Telephone service entrance raceway			x	
40	CATV service entrance raceway			x	
41	Site lighting and fixtures			x	
42	Lighting system and fixtures			x	
43	Power distribution system	x			
44	Emergency Generator Set			x	
45	Generator primary fuel tank			x	
46	Generator fuel			x	
47	Generator fuel piping			x	
48	Gen exhaust piping, intake/discharge duct, insulation			x	
49	Generator muffler and wall thimble				
50	Uninterrupted Power Supply system			x	
51	Transient Voltage Surge Suppression		x		
52	Generator control wiring			x	
53	Generator Charger Connection			x	
54	Generator Block Heater			x	
55	Generator ATS			x	
56	Contingency Fees or allowances		x		
57	Signage and neon lighting			x	
58	Irrigation system controls and controls wiring			x	
59	Valance trim and lenses at restrooms			x	
60	Bond premium		x		
61	Survey of all light poles, manholes, pullboxes, etc.		x		

62 **Special Systems:**

Division	System	Incl	Excl	NA	Notes	Comments
	Lightning Protection			x		
	Fire Alarm			x		
	Telephone			x		
	Data / Premise Wiring			x		
	CATV/MATV			x		
	CCTV			x		
	Security / Intrusion			x		
	Building Automation System			x		
	PA / Sound / Background Music			x		

***Special Systems Notes:**

A This system is complete and operational.

B This system includes conduit and boxes only. Wiring and devices are by others.

63 Loveland Electric II, LLC guarantees its work to be free from defects for one year from beneficial occupancy by the owner, or final completion, whichever comes first. Repairs to defective workmanship and/or materials within this period will be made at no cost to the owner. This warranty excludes lamps, items furnished by others, unauthorized service or negligent care.

64 Loveland Electric II, LLC will require the following to be provided to us at no cost:

A. Adequate on-site employee parking and an area for our storage and office trailer(s).
B. On-site dumpster and dumping services.
C. Sanitary toilet facilities.
D. Potable water.
E. Complete CADD files.

65 Loveland Electric II, LLC agrees to furnish a sufficient number of qualified workers to perform the work in sequen with a mutually agreed upon construction schedule. We rely on the work of other trades to be completed in a timely manner, prior to our work.

66 All work will be performed during normal working hours. We have no provision included for overtime, multiple shifts, weekend or holiday work in order to make up time in the construction schedule lost by other trades, permitin inclement weather or other lost time not attributable to the work of Loveland Electric II, LLC

67 Transportation and storage of owner furnished equipment is excluded.

Scope Clarifications – Attachment B

Project Name: **VOW WTP HSP #9**
Bid Date: **08/08/24**

Specifications

1. Specification Section 16010 - Basic Electrical Requirements: Included
2. Specification Section 16050 - Basic Electrical Materials: Included
3. Specification Section 16110 - Raceways: Included
4. Specification Section 16120 - Conductors: Included
5. Specification Section 16450 - Grounding: Included
6. Specification Section 16480 - Low Voltage Motor Control: **Excluded**
7. Specification Section 16485 - Variable Frequency Drives: **Excluded**
8. Specification Section 16950 - Electrical Testing: Included
9. Specification Section 17301 - Instrumentation and Control: Includes conduit, wire and wire terminations to all instrumentation and control devices shown on drawings and specified.
   All instrumentation and control devices, junction boxes, surge suppressors and control panels will be furnished by I & C Subcontractor.
   All process pipe mounted devices to be installed by others.
   All other instrumentation and control devices, junction boxes, surge suppressors and control panels with be installed under this scope.

Inclusions

1. Performance and Payment Bond premium.
2. Trash and debris removal to Contractor provided dumpsters.
3. Applicable taxes.

Exclusions

1. Permit fees
2. Exhaust fans and associated control panels.
3. FPL primary conduit.
4. Utility installation fees, deposits or temporary power consumption costs.
5. Dewatering
6. Repairing and/or replacing asphalt and sub-base.
7. Repairing and/or replacing concrete floors and sidewalks.
8. Replacing sod or other landscape material.
9. Traffic and safety bollards.
10. Concrete and housekeeping pads.
11. Concrete lab testing.

12. Soil testing.
13. Transportation, off-loading, storage and setting in place equipment not furnished under this scope.
14. Prevailing Wage Rates/Responsible Wages and Benefits.
15. Furnishing, terminating, and testing fiber optic cable.

Clarifications

1. Demolition will consist of making all circuits safe.
2. Demolition of electrical equipment and wire will consist of complete removal from site.
3. The failure of other trades to maintain the project schedule will not adversely affect the durations allowed in the original schedule for the electrical portion of the work.
4. All work will be performed during normal working hours. We have no provision included for overtime, multiple shifts, weekend or holiday work in order to make up time in the construction schedule lost by other trades, permitting, inclement weather or other lost time not attributable to the work of Loveland Electric II, LLC.
5. Proposal assumes the electrical drawings to be complete and no further redesign and installation of additional systems, equipment, conduit or wire, not specifically shown on drawings or otherwise noted in proposal, will be necessary to make a complete and working electrical system.

General Conditions

1. Loveland Electric II, LLC guarantees its work to be free from defects for one year from beneficial occupancy by the owner, or final completion, whichever comes first. Repairs to defective workmanship and/or materials within this period will be made at no cost to the owner. This warranty excludes lamps, items furnished by other, unauthorized service or negligent care.
2. Loveland Electric II, LLC agrees to furnish a sufficient number of qualified workers to perform the work in sequence with a mutually agreed upon construction schedule. We rely on the work of other trades to be completed in a timely manner, prior to our work.
3. Loveland Electric II, LLC will require the following to be provided at no cost:
   - adequate on-site employee parking and an area for our storage and office trailers;
   - on-site dumpster and dumping services;
   - sanitary toilet facilities;
   - potable water;
   - complete CADD files.
4. Loveland Electric II, LLC shall not be held liable for errors or omissions in the designs of others, nor inadequacies of materials and equipment specified or supplied by others.

5. Equipment and materials supplied by Loveland Electric II, LLC are warranted only to the extent that the same are warranted by the manufacturer.
6. Loveland Electric II, LLC shall not be liable for indirect loss or damage.
7. Unless included in this proposal, all bonding and/or special insurance requirements are supplied at additional cost.
8. If a formal contract is required, its' conditions must not deviate from this proposal without our prior approval.
9. Anything (verbal or written) expressed or implied elsewhere, which is contrary to these conditions shall be null and void.

Subcontrator Bid Evaluation and Comparison Sheet

Trade Description:	**Instrumentation & Controls**
Project Name:	**VOW WTP M2 High Pressure Pump 9 Improvements**
Owner:	**Village of Wellington**
Bid Date:	**Friday, August 29, 2025**

Scope Item Description		**CC Control Corporation** **Juan Reyes** **561-293-3975**		**N/A**		**N/A**		**N/A**
Base Bid Before Alternates		**$ 77,889.00**		**$ -**				
Base Bid		$ 77,789.00						
Payment & Performance Bond		$ -						
Indemnification		$ 100.00						
Alternates								
Bid Alternate		$ 45,689.00						
Payment & Performance Bond		$ -						
Indemnification		$ -						
Bid Document Requirements								
Bid Form		Complete						
Clarifications / Exceptions		Noted in Proposal						
Acknowledged Addenda		No						
Additional Notes								
Payment & Performance Bond Rate		N/A						
Submittal Package Lead Time		6 weeks						
Material Delivery		12 weeks						
SUBTOTAL:		$ 77,889		$ -		$ -		$ -
Bond:	0.00%	Not Included	0.00%		0.00%	$ -	0.00%	
Adjustment		None						
Total Adjusted Scope:		**$ 77,889.00**		**$ -**		**$ -**		**$ -**
		$ 77,889.00		**$ -**		**$ -**		

Recommend award to CC Control Corp. as the lowest responsive bidder.

C. C. CONTROL CORP.

5760 CORPORATE WAY, SUITE 100
WEST PALM BEACH, FLORIDA 33407

PHONE: 561 293-3975
FAX: 561 293-3976

CUSTOMER: WHARTON-SMITH INC.

ATTN: ELIANA CORIE
ecorie@whartonsmith.com

PROJECT: WTP M2 HIGH PRESSURE PUMP #9 IMPROVEMENTS
VILLAGE OF WELLINGTON

DATE: 8/20/2025

VALID FROM: 8/20/2025
VALID TO: 10/19/2025

DESCRIPTION	QTY	AMOUNT

C. C. CONTROL CORP. PROPOSES TO FURNISH THE FOLLOWING COMPLETE WITH EXCEPTIONS AS LISTED:

EXCEPTIONS:

A) QUOTE DOES NOT INCLUDE ANY DEMOLITION OR INSTALLATION.
B) QUOTE DOES NOT INCLUDE ANY CONDUITS OR CONDUIT SEAL-OFF'S.
C) QUOTE DOES NOT INCLUDE ANY WIRE/CABLE, EXCEPT AS NOTED BELOW.
D) QUOTE DOES NOT INCLUDE ANY FIELD TERMINATIONS.
E) QUOTE DOES NOT INCLUDE ANY PANEL MOUNTING HARDWARE
F) QUOTE DOES NOT INCLUDE ANY DISCONNECTS OR PULL BOXES.
G) QUOTE DOES NOT INCLUDE ANY IMPULSE PIPING OR PROCESS TAPS.
H) QUOTE DOES NOT INCLUDE ANY VALVES OR VALVE ACTUATOR ACTUATOR.
I) QUOTE DOES NOT INCLUDE HPP-9 VARIABLE FREQUNCY DRIVE.

********** **BASE BID** **********

ITEM NO.1
VALVE CONTROL PANEL PCPMOVRO2 MODIFICATIONS (CV-1*34 SWING PUMP VALVES)

EATON / CUTLER HAMMER AN56BN0AC NEMA SIZE 0 3-PHASE REVERSING STARTER	3
EATON / CUTLER HAMMER H2005B-3 CLASS 20 HEATER PACKS, 1.2-1.96A, 3/CARTON	3
EATON / CUTLER HAMMER GMCP003AOC 3A 3-POLE G-FRAME BREAKER	3
EATON / CUTLER HAMMER 1294C01H01 BREAKER LOCK DOG	3
ALLEN-BRADLEY 1492-GH005 1P 120V 0.5A CIRCUIT BREAKER	3
ALLEN-BRADLEY 1492-GH050 1P 120V 5A CIRCUIT BREAKER	3
WIRES, TERMINALS, NAMEPLATES	LOT

ITEM NO.2
HS2-1634, HS2-1734, HS2-1834 SWING PUMP VALVES OPERATOR STATION (3-REQ'D)

SQUARE-D 9001SKY3 3-HOLE POLYMERIC CONTROL STATION	3
SQD 9001SKS43B 3 POSITION SELECTOR SWITCH	3

SQD 9001SKR1U 30MM MOMENTARY PUSH BUTTON OPERATOR	6
SQD 9001KA1 30MM CONTACT BLOCK, 10A, (1)NO / (1)NC, SCREW CLAMP TERMINAL	12
LABELS	LOT

ITEM NO.3

HIGH PRESSURE PUMP NO.9 OPERATOR PUSH BUTTON STATION

SQUARE-D 9001SKY111 1-HOLE POLYMERIC CONTROL STATION WITH HOA SELECTOR	1

ITEM NO.4

HPP-9 PUMP INLET PRESSURE GAUGE ASSEMBLY

ASHCROFT 45-1279AS-04L-XNHPD-100# DURAGAUGE PLUS 4.5" DIAL PROCESS GAUGE	1
A) RANGE: 0 TO 100 PSI	
B) 316L STAINLESS STEEL BOURDON TUEB AND SOCKET	
C) 1/2 IN MNPT LOWER STEM CONNECTION	
D) SEAL: BUNA-N	
E) ACRYLIC WINDOW, SILICONE FILL	
F) TAGS: **PI-1940**	
ASHCROFT 02-1112SD-25 PRESSURE SNUBBER, 303 SST. BODY	INCL
ASHCROFT 50-201SS-02T-XCKPUSE SERIES THREADED DIAPHRAGM SEAL	INCL
A) 1/2" NPT FEMALE PROCESS CONNECTION	
B) 1/2" NPT FEMALE INSTRUMENT CONNECTION	
C) 316L STAINLESS STEEL HOUSING	
D) 316L STAINLESS STEEL DIAPHRAGM MATERIAL	
E) 1/4" FLUSHING PORT IN LOWER HOUSING	
JAMESBURY 1/4-33-3600TL 1/4" 316 S.S. BALL VALVE	1
JAMESBURY 1/2-33-3600TL 1/2" 316 S.S. BALL VALVE	1
1/4" x 2" 316 STAINLESS STEEL NIPPLE	2
1/4" STAINLESS STEEL ELBOW	1
1/2" x 2" 316 STAINLESS STEEL NIPPLE	2
1/2" x 4" 316 STAINLESS STEEL NIPPLE	1

ITEM NO.5

HPP-9 PUMP INLET PRESSURE TRANSMITTER ASSEMBLY

ROSEMOUNT 3051S PRESSURE TRANSMITTER	1
A) RANGE: -14 TO 2000 PSI	
B) OUTPUT: 4-20MADC WITH HART	
C) PROCESS CONN.: 316L TRADITIONAL FLANGE 1/4-18 NPT	
D) HOUSING: ALUMINUM WITH 1/2-14 NPT	
F) DISPLAY: PLANTWEB LCD	
H) ASSEMBLE TO ROSEMOUNT CONVENSIONAL 304 INTEGRAL MANIFOLD	
I) TAGS: **PIT-1940**	
ROSEMOUNT 0304 IN-LINE MANIFOLD WITH THE FOLLOWING:	1
A) MANIFOLD STYLE: THREADED	
B) MANIFOLD TYPE: 2-VALVE	
C) BODY | BONNET | STEM | TIP: SST | SST | SST | 316 SST	
D) PROCESS CONN. 1/2-14 FNPT	
E) PACKING MATERIAL: PTFE	
F) VALVE SEAT: INTEGRAL	
SQD SSP030SSE10HC 4/20MA PIPE STYLE SURGE ARRESTER	1
JAMESBURY 1/2-33-3600TL 1/2" 316 S.S. BALL VALVE	2
1/2" STAINLESS STEEL TEE	1
1/2" x 2" 316 STAINLESS STEEL NIPPLE	3
1/2" x 4" 316 STAINLESS STEEL NIPPLE	1
2" X 60" ALUMINUM PIPE STANCHION W/ 10" X 10" X 1/2" ALUMINUM BASE	1
MISC. BRACKET HARWARE	LOT

ITEM NO.6

HPP-9 PUMP OUTLET PRESSURE GAUGE ASSEMBLY

ASHCROFT 1279 DURAGAUGE PLUS 4.5" DIAL PROCESS GAUGE	1
A) RANGE: 0 TO 200 PSI	
B) 316L STAINLESS STEEL BOURDON TUEB AND SOCKET	
C) 1/2 IN MNPT LOWER STEM CONNECTION	
D) SEAL: BUNA-N	
E) ACRYLIC WINDOW, SILICONE FILL	
F) TAGS: **PI-1942**	
ASHCROFT 02-1112SD-25 PRESSURE SNUBBER, 303 SST. BODY	INCL
ASHCROFT 50-201SS-02T-XCKPUSE SERIES THREADED DIAPHRAGM SEAL	INCL
A) 1/2" NPT FEMALE PROCESS CONNECTION	
B) 1/2" NPT FEMALE INSTRUMENT CONNECTION	
C) 316L STAINLESS STEEL HOUSING	
D) 316L STAINLESS STEEL DIAPHRAGM MATERIAL	
E) 1/4" FLUSHING PORT IN LOWER HOUSING	
JAMESBURY 1/4-33-3600TL 1/4" 316 S.S. BALL VALVE	1
JAMESBURY 1/2-33-3600TL 1/2" 316 S.S. BALL VALVE	1
1/4" x 2" 316 STAINLESS STEEL NIPPLE	2
1/4" STAINLESS STEEL ELBOW	1
1/2" x 2" 316 STAINLESS STEEL NIPPLE	2
1/2" x 4" 316 STAINLESS STEEL NIPPLE	1

ITEM NO.7

HPP-9 PUMP OUTLET PRESSURE TRANSMITTER ASSEMBLY

ROSEMOUNT 3051S PRESSURE TRANSMITTER	1
A) RANGE: -14 TO 2000 PSI	
B) OUTPUT: 4-20MADC WITH HART	
C) PROCESS CONN.: 316L TRADITIONAL FLANGE 1/4-18 NPT	
D) HOUSING: ALUMINUM WITH 1/2-14 NPT	
F) DISPLAY: PLANTWEB LCD	
H) ASSEMBLE TO ROSEMOUNT CONVENSIONAL 304 INTEGRAL MANIFOLD	
I) TAGS: **PIT-1942**	
ROSEMOUNT 0304 IN-LINE MANIFOLD WITH THE FOLLOWING:	1
A) MANIFOLD STYLE: THREADED	
B) MANIFOLD TYPE: 2-VALVE	
C) BODY | BONNET | STEM | TIP: SST | SST | SST | 316 SST	
D) PROCESS CONN. 1/2-14 FNPT	
E) PACKING MATERIAL: PTFE	
F) VALVE SEAT: INTEGRAL	
SQD SSP030SSE10HC 4/20MA PIPE STYLE SURGE ARRESTER	1
JAMESBURY 1/2-33-3600TL 1/2" 316 S.S. BALL VALVE	2
1/2" STAINLESS STEEL TEE	1
1/2" x 2" 316 STAINLESS STEEL NIPPLE	3
1/2" x 4" 316 STAINLESS STEEL NIPPLE	1
2" X 60" ALUMINUM PIPE STANCHION W/ 10" X 10" X 1/2" ALUMINUM BASE	1
MISC. BRACKET HARWARE	LOT

ITEM NO.8

PROJECT SERVICES

ENGINEERING	LOT
SUBMITTALS	LOT
PLC PROGRAMMING	LOT
SCADA PROGRAMMING	LOT

TESTING	LOT
START-UP	LOT
TRAINING	LOT
O & M MANUALS	LOT
WARRANTY, 1-YEAR	LOT

*********** BID ALTERNATIVE #1 **********

ITEM NO.9

VALVE CONTROL PANEL PCPMOVRO2 MODIFICATIONS (CV-1*20 CONCENTRATE VALVES)

EATON / CUTLER HAMMER AN56BN0AC NEMA SIZE 0 3-PHASE REVERSING STARTER	3
EATON / CUTLER HAMMER H2005B-3 CLASS 20 HEATER PACKS, 1.2-1.96A, 3/CARTON	3
EATON / CUTLER HAMMER GMCP003AOC 3A 3-POLE G-FRAME BREAKER	3
EATON / CUTLER HAMMER 1294C01H01 BREAKER LOCK DOG	3
ALLEN-BRADLEY 1492-GH005 1P 120V 0.5A CIRCUIT BREAKER	3
ALLEN-BRADLEY 1492-GH050 1P 120V 5A CIRCUIT BREAKER	3
WIRES, TERMINALS, NAMEPLATES	LOT

ITEM NO.10

HS1-1620, HS1-1720, HS1-1820 CONCENTRATE VALVES OPERATOR STATION (3 REQ'D)

SQUARE-D 9001SKY3 3-HOLE POLYMERIC CONTROL STATION	3
SQD 9001SKS43B 3 POSITION SELECTOR SWITCH	3
SQD 9001SKR1U 30MM MOMENTARY PUSH BUTTON OPERATOR	6
SQD 9001KA1 30MM CONTACT BLOCK, 10A, (1)NO / (1)NC, SCREW CLAMP TERMINAL	12
LABELS	LOT

ITEM NO.11

MAIN CONTROL PANEL PLC-RO2 MODIFICATIONS

ALLEN-BRADLEY 1756-A7 CONTROLLOGIX 7-SLOT MOUNTING CHASSIS RACK	1
ALLEN-BRADLEY 1756-PA72 CONTROLLOGIX POWER SUPPLY, 85-256VAC, 75W	1
ALLEN-BRADLEY 1756-IB16 CONTROLLOGIX DIGITAL INPUT, 16-POINT, 24VDC	1
ALLEN-BRADLEY 1756-OB16I CONTROLLOGIX ISOLATED DIGITAL OUTPUT, 16-POINT, 12/24VDC	1
ALLEN BRADLEY 1756-TBCH TERMINAL BLOCK, 36-PIN CAGE CLAMP BLOCK	2
PHOENIX CONTACT 2838322 PT 4X1-24DC-ST PLUGTRAB PT SURGE PROTECTION PLUG	4
PHOENIX CONTACT 2839363 PT 4X1-BE PLUGTRAB PT SURGE PROTECTION BASE	4
FINDER 60.13.9.024.0070 60 SERIES RELAYS, 3PDT, 10A, 24VDC, LED	8
FINDER 90.27SMA DIN RAIL 11-PINS RELAY SOCKET, SCREW TERMINAL	8
WIRES, TERMINALS, LABELS	LOT

ITEM NO.12

ADDITONAL PROJECT SERVICES

ENGINEERING	LOT
SUBMITTALS	LOT
PLC PROGRAMMING	LOT
TESTING	LOT
START-UP	LOT
O & M MANUALS	LOT
WARRANTY, 1-YEAR	LOT

SUMMARY		**SELL**
ITEMS NO.1 THRU NO.8	HIGH PRESSURE PUMP #9 ADDITION (BASE BID)	$72,700.00
ITEMS NO.9 TRHU 12	CONCENTRATE PIPING IMPROVEMENTS (BID ALTERNATIVE #1)	$42,700.00

TOTAL: **$115,400.00 PLUS TAX**

SUBMITTAL: 6-8 WEEKS (AFTER RECEIPT OF PURCHASE ORDER)

DELIVERY: 18-20 WEEKS (AFTER APPROVED DRAWINGS)

FOB: JOB SITE

TERMS: NET 30 DAYS (SUBJECT TO CREDIT APPROVAL)

WARRANTY: ALL WARRANTIES SHALL EXPIRE ONE (1) YEAR FROM DATE OF START-UP FROM SELLER TO BUYER UNLESS SPECIALLY INDICATED OTHERWISE AND WILL BE NULL AND VOID UNLESS MATERIALS ARE STORED UNDER PROPER CONDITIONS DETERMINED BY C.C. CONTROL CORP.

JUAN REYES
jreyes@cccontrolcorp.com

ALTERNATE BID

COST SUMMARY

Direct Costs	LABOR	EQUIPMENT	MATERIALS	SUBS	TOTALS
Total Direct Costs	$0	$0	$0	$211,392	$211,392
Total GC's	$93,467	$0	$30,795	$3,460	$127,722
Fee				$30,520	$30,520
Total for Direct Costs	**$93,467**	**$0**	**$30,795**	**$245,373**	**$369,635**
Contingencies and Allowances	**LABOR**	**EQUIPMENT**	**MATERIALS**	**SUBS**	**TOTALS**
Owner Controlled Contingency (6.0% of Direct Costs)				$20,347	$20,347
Dedicated Allowances (see next sheet)				$0	$0
Total for Contingencies and Allowances	**$0**	**$0**	**$0**	**$20,347**	**$20,347**

Bond and Insurance	LABOR	EQUIPMENT	MATERIALS	SUBS	TOTALS
Bond				$4,740	$4,740
Insurance				$2,034	$2,034
Total for Bond and Insurance	**$0**	**$0**	**$0**	**$6,774**	**$6,774**

GMP TOTALS	**$93,467**	**$0**	**$30,795**	**$272,494**	**$396,756**

VOW WTP Membrane Plant #2 (M2) High Pressure Pump 9 Improvements - Bid Alt
GMP PROPOSAL
8/29/25

COST OF WORK

DESCRIPTION	QTY	UOM	LABOR $ AMOUNT	EQUIPMENT $ AMOUNT	MATERIALS $ AMOUNT	SUBS $ AMOUNT	$ TOTALS	COMMENTS
DIRECT COSTS							**$ 211,392**	
MECHANICAL INSTALL SUBCONTRACTOR	1	LS	$ -	$ -	$ -	$ 149,703	$ 149,703	Wharton Smith
INSTRUMENTATION SUBCONTRACTOR	1	LS	$ -	$ -	$ -	$ 45,689	$ 45,689	CC Control Corp
ELECTRICAL SUBCONTRACTOR	1	LS	$ -	$ -	$ -	$ 16,000	$ 16,000	Loveland Electric
DEDICATED ALLOWANCES							**$ -**	
N/A	1	LS	$ -	$ -	$ -	$ -	$ -	
TOTAL DIRECT COST			**$ -**	**$ -**	**$ -**	**$ 211,392**	**$ 211,392**	

Wharton–Smith, Inc.
CONSTRUCTION GROUP

JOB NAME: VOW WTP Membrane Plant #2 (M2) HPP 9 Improvements - BASE
ESTIMATE #: 1

GENERAL CONDITIONS

960 DIRECT MANHOURS | 24 MANWEEKS
DURATION = 2.0 MONTHS, PLANNED | 1 MEN

DESCRIPTION	QTY	UNIT	MH/ UNIT	BASE RATE	LABOR U/P	LABOR TOTAL MH	LABOR $ AMOUNT	HR/UNIT	EQUIPMENT RATE	EQUIPMENT $ AMOUNT	MATERIAL U/P	MATERIAL $ AMOUNT	MATERIAL $ AMOUNT	SUBCONTRACTS U/P	SUBCONTRACTS $ AMOUNT	$ TOTALS
PROJECT MANAGEMENT TEAM													W/ 7% TAX			
FIELD STAFF																
SUPERINTENDENT	9	WK	24	$157.00	$3,768	$208	$32,706			$0		$0	$0		$0	$32,706
OFFICE STAFF																
PROJECT MANAGER	9	WK	16	$157.00	$2,512	$139	$21,804			$0		$0	$0		$0	$21,804
PROJECT ENGINEER	9	WK	24	$96.00	$2,304	$208	$19,999			$0		$0	$0		$0	$19,999
PROJECT ASSISTANT	9	WK	8	$80.00	$640	$69	$5,555			$0		$0	$0		$0	$5,555
OTHER STAFF																
COST ACCOUNTANT	9	WK	4	$124.00	$496	$35	$4,305			$0		$0	$0		$0	$4,305
SAFETY COORDINATOR	9	WK	4	$140.00	$560	$35	$4,861			$0		$0	$0		$0	$4,861
RELATED MANAGEMENT COSTS																
SOFTWARE COSTS	1	LS		$50.00	$0	$0	$0			$0		$0	$0	$880	$880	$880
TEMP.FACILITIES & UTILITIES																
WATER, MONTHLY	2	MO		$50.00	$0	$0	$0			$0	$250	$500	$535		$0	$535
INTERNET/TELEPHONE, MONTHLY CHARGES - **W-S**	2	MO		$50.00	$0	$0	$0			$0	$200	$400	$428		$0	$428
CELLULAR TELEPHONE, MONTHLY CHARGES	2	MO		$50.00	$0	$0	$0			$0	$300	$600	$642		$0	$642
FIELD OFFICE, WHARTON SMITH INC	2	MO	5	$50.00	$250	$10	$500			$0	$8,000	$16,000	$17,120		$0	$17,620
JOB OFFICE SUPPLIES	2	MO		$50.00	$0	$0	$0			$0	$750	$1,500	$1,605		$0	$1,605
COMPUTER EQUIPMENT FOR FIELD OFFICE - **W-S**	1	LS		$50.00	$0	$0	$0			$0	$2,000	$2,000	$2,140		$0	$2,140
TOOL TRAILERS - __1__ **REQUIRED**	2	MO		$50.00	$0	$0	$0			$0	$250	$500	$535		$0	$535
TEMPORARY TOILETS - __1__ **REQUIRED**	2	MO		$50.00	$0	$0	$0			$0	$150	$300	$321		$0	$321
TEMPORARY SEWAGE HOLDING TANKS - **ENGINEER & W-S**	2	MO		$50.00	$0	$0	$0			$0	$300	$600	$642		$0	$642
CONSTRUCTION EQUIPMENT & TOOLS																
SMALL TOOLS AND SUPPLIES	1	LS		$50.00	$0	$0	$0			$0	$2,880	$2,880	$3,082		$0	$3,082
SAFETY & HEALTH & HOUSEKEEPING																
SAFETY DEVICES	1	LS		$50.00	$0	$0	$0			$0	$1,000	$1,000	$1,070		$0	$1,070
CLEAN-UP AT END OF PROJECT	1	LS	40	$50.00	$2,000	$40	$2,000			$0		$0	$0		$0	$2,000
CLEAN-UP THROUGHOUT DURATION OF PROJECT	9	WK	4	$50.00	$200	$35	$1,736			$0		$0	$0		$0	$1,736
DUMPSTERS	2	MO		$50.00	$0	$0	$0			$0	$1,250	$2,500	$2,675		$0	$2,675
JANITORIAL	9	WK		$50.00	$0	$0	$0			$0		$0	$0	$280	$2,430	$2,430
TOTAL GENERAL CONDITIONS						$779	$93,467			$0			$30,795		$3,310	**$127,571**

GENERAL REQUIREMENTS

PERMITS, FEES, INSURANCE, LEGAL, ETC.																
BUILDER'S RISK INSURANCE-**COASTAL COUNTY**	2	MO		$50.00	$0.00	0.00	0.00			$0		$0	$0	$75	$150	$150
TOTAL GENERAL REQUIREMENTS						0.00	0.00			$0			$0		$150	**$150**

Subcontrator Bid Evaluation and Comparison Sheet

Trade Description:	**Master Plant Contractor**
Project Name:	**VOW WTP M2 High Pressure Pump 9 Improvements**
Owner:	**Village of Wellington**
Bid Date:	**Tuesday, October 28, 2025**

Scope Item Description		**Wharton-Smith** **Greg Williams** **561-748-5956**		**Lawrence Lee** **Geoff Schmidt** **561-578-7715**		**Florida Design Drilling** **Jeff Holst** **561-818-3228**		**N/A**
Base Bid Before Alternates		**$ 512,860.00**		**NO BID**		**NO BID**		
Base Bid - HPP 9 Install, HPP 6, 7, 8 Mods.		$ 512,860.00						
Alternates								
Bid Alternate - Concentrate Pipe Mods.		$ 149,703.00						
Bid Document Requirements								
Bid Form		N/A						
Clarifications / Exceptions		N/A						
Acknowledged Addenda		N/A						
Additional Notes								
Payment & Performance Bond Rate		N/A						
Submittal Package Lead Time		See Schedule						
Material Delivery		See Schedule						
SUBTOTAL:		$ 512,860.00		$ -		$ -		$ -
Bond:	0.00%		0.00%		0.00%	Excluded	0.00%	
Adjustment		None				None		
Total Adjusted Scope:		**$ 512,860.00**		**$ -**		**$ -**		**$ -**
		$ 512,860.00		**$ -**		**$ -**		

Recommend award to Wharton-Smith as the lowest responsive bidder.

Subcontrator Bid Evaluation and Comparison Sheet

Trade Description: Electrical
Project Name: VOW WTP M2 High Pressure Pump 9 Improvements
Owner: Village of Wellington
Bid Date: Friday, August 29, 2025

Scope Item Description		Loveland Electric II Robert J. Loveland 561-882-0401		N/A		N/A		N/A
Base Bid Before Alternates		**$ 163,900.00**						
Base Bid		$ 161,000.00						
Payment & Performance Bond		$ 2,800.00						
Indemnification		$ 100.00						
Alternates								
Bid Alternate		$ 16,000.00						
Payment & Performance Bond		$ -						
Indemnification		$ -						
Bid Document Requirements								
Bid Form		Complete						
Clarifications / Exceptions		Noted in Proposal						
Acknowledged Addenda		Yes						
Additional Notes								
Payment & Performance Bond Rate		N/A						
Submittal Package Lead Time		8 weeks						
Material Delivery		30 weeks						
SUBTOTAL:		$ 163,900.00		$ -		$ -		$ -
Bond:	0.00%	Included	0.00%		0.00%	$ -	0.00%	
Adjustment		None						
Total Adjusted Scope:		**$ 163,900.00**		**$ -**		**$ -**		**$ -**
		$ 163,900.00		**$ -**		**$ -**		

Recommend award to Loveland Electric as the lowest responsive bidder.

To:	Wharton-Smith, Inc.	Project:	VOW WTP HSP #9
		Location:	1100 Wellington Trace
Attn:	Eliana Corie	Bid Date:	08/08/24 04/17/25 08/18/25

We are pleased to submit our scope and proposal for the above referenced project. Our electrical proposal includes all labor, material, and taxes, and is based and bid upon the electrical drawings as noted below.

Electrical wiring in accordance with the following:

I. Attachment A – Scope of Work
Attachment B – Scope Clarifications

II. Plans: E-1 thru E-7 Kimley Horn Dated March 2024

III. Specifications: Division 16000

IV. Addenda: 1

V. Duration: Proposal is based on 270 calendar day final completion.

VI. We propose to complete all work to furnish the required material, labor and supervision in accordance with National Electric Code for work indicated on the bid documents only. No provisions have been included in this proposal for design errors or omissions.

VII. Subcontract Agreement: AIA Document A101 or other mutually agreed upon document. Other documents may require further negotiations of terms and conditions.

VIII. Insurance: Based on Loveland Electric, Inc. standard certificate of insurance and coverage. Copy of certificate is available upon request.

IX. Market Conditions: This proposal is valid for one hundred eighty (180) days from this date. After this time we reserve the right to review our proposal and modify, if necessary, based on changing market conditions.

The price for the work described above including attachments will be as follows:

Base Bid:	**$161,000.00**
Alt-1 Base Bid (Not included in base bid):	**$ 16,000.00**
Bond premium not included in base bid:	**$ 2,800.00**

Thank you for the opportunity to submit this proposal. Should you require any additional information or clarifications, please do not hesitate to contact our office.

LOVELAND ELECTRIC II, LLC

Tim McMullen
Chief Estimator

Subcontrator Bid Evaluation and Comparison Sheet

Trade Description:	**Instrumentation & Controls**
Project Name:	**VOW WTP M2 High Pressure Pump 9 Improvements**
Owner:	**Village of Wellington**
Bid Date:	**Friday, August 29, 2025**

Scope Item Description		**CC Control Corporation** **Juan Reyes** **561-293-3975**		**N/A**		**N/A**		**N/A**
Base Bid Before Alternates		**$ 77,889.00**		**$ -**				
Base Bid		$ 77,789.00						
Payment & Performance Bond		$ -						
Indemnification		$ 100.00						
Alternates								
Bid Alternate		$ 45,689.00						
Payment & Performance Bond		$ -						
Indemnification		$ -						
Bid Document Requirements								
Bid Form		Complete						
Clarifications / Exceptions		Noted in Proposal						
Acknowledged Addenda		No						
Additional Notes								
Payment & Performance Bond Rate		N/A						
Submittal Package Lead Time		6 weeks						
Material Delivery		12 weeks						
SUBTOTAL:		$ 77,889		$ -		$ -		$ -
Bond:	0.00%	Not Included	0.00%		0.00%	$ -	0.00%	
Adjustment		None						
Total Adjusted Scope:		**$ 77,889.00**		**$ -**		**$ -**		**$ -**
		$ 77,889.00		**$ -**		**$ -**		

Recommend award to CC Control Corp. as the lowest responsive bidder.

C. C. CONTROL CORP.

5760 CORPORATE WAY, SUITE 100
WEST PALM BEACH, FLORIDA 33407

PHONE: 561 293-3975
FAX: 561 293-3976

CUSTOMER: WHARTON-SMITH INC.

ATTN: ELIANA CORIE
ecorie@whartonsmith.com

PROJECT: WTP M2 HIGH PRESSURE PUMP #9 IMPROVEMENTS
VILLAGE OF WELLINGTON

DATE: 8/20/2025

VALID FROM: 8/20/2025
VALID TO: 10/19/2025

DESCRIPTION	QTY	AMOUNT

C. C. CONTROL CORP. PROPOSES TO FURNISH THE FOLLOWING COMPLETE WITH EXCEPTIONS AS LISTED:

EXCEPTIONS:

A) QUOTE DOES NOT INCLUDE ANY DEMOLITION OR INSTALLATION.
B) QUOTE DOES NOT INCLUDE ANY CONDUITS OR CONDUIT SEAL-OFF'S.
C) QUOTE DOES NOT INCLUDE ANY WIRE/CABLE, EXCEPT AS NOTED BELOW.
D) QUOTE DOES NOT INCLUDE ANY FIELD TERMINATIONS.
E) QUOTE DOES NOT INCLUDE ANY PANEL MOUNTING HARDWARE
F) QUOTE DOES NOT INCLUDE ANY DISCONNECTS OR PULL BOXES.
G) QUOTE DOES NOT INCLUDE ANY IMPULSE PIPING OR PROCESS TAPS.
H) QUOTE DOES NOT INCLUDE ANY VALVES OR VALVE ACTUATOR ACTUATOR.
I) QUOTE DOES NOT INCLUDE HPP-9 VARIABLE FREQUNCY DRIVE.

********** **BASE BID** **********

ITEM NO.1
VALVE CONTROL PANEL PCPMOVRO2 MODIFICATIONS (CV-1*34 SWING PUMP VALVES)

EATON / CUTLER HAMMER AN56BN0AC NEMA SIZE 0 3-PHASE REVERSING STARTER	3
EATON / CUTLER HAMMER H2005B-3 CLASS 20 HEATER PACKS, 1.2-1.96A, 3/CARTON	3
EATON / CUTLER HAMMER GMCP003AOC 3A 3-POLE G-FRAME BREAKER	3
EATON / CUTLER HAMMER 1294C01H01 BREAKER LOCK DOG	3
ALLEN-BRADLEY 1492-GH005 1P 120V 0.5A CIRCUIT BREAKER	3
ALLEN-BRADLEY 1492-GH050 1P 120V 5A CIRCUIT BREAKER	3
WIRES, TERMINALS, NAMEPLATES	LOT

ITEM NO.2
HS2-1634, HS2-1734, HS2-1834 SWING PUMP VALVES OPERATOR STATION (3-REQ'D)

SQUARE-D 9001SKY3 3-HOLE POLYMERIC CONTROL STATION	3
SQD 9001SKS43B 3 POSITION SELECTOR SWITCH	3

SQD 9001SKR1U 30MM MOMENTARY PUSH BUTTON OPERATOR	6
SQD 9001KA1 30MM CONTACT BLOCK, 10A, (1)NO / (1)NC, SCREW CLAMP TERMINAL	12
LABELS	LOT

ITEM NO.3

HIGH PRESSURE PUMP NO.9 OPERATOR PUSH BUTTON STATION

SQUARE-D 9001SKY111 1-HOLE POLYMERIC CONTROL STATION WITH HOA SELECTOR	1

ITEM NO.4

HPP-9 PUMP INLET PRESSURE GAUGE ASSEMBLY

ASHCROFT 45-1279AS-04L-XNHPD-100# DURAGAUGE PLUS 4.5" DIAL PROCESS GAUGE	1
A) RANGE: 0 TO 100 PSI	
B) 316L STAINLESS STEEL BOURDON TUEB AND SOCKET	
C) 1/2 IN MNPT LOWER STEM CONNECTION	
D) SEAL: BUNA-N	
E) ACRYLIC WINDOW, SILICONE FILL	
F) TAGS: **PI-1940**	
ASHCROFT 02-1112SD-25 PRESSURE SNUBBER, 303 SST. BODY	INCL
ASHCROFT 50-201SS-02T-XCKPUSE SERIES THREADED DIAPHRAGM SEAL	INCL
A) 1/2" NPT FEMALE PROCESS CONNECTION	
B) 1/2" NPT FEMALE INSTRUMENT CONNECTION	
C) 316L STAINLESS STEEL HOUSING	
D) 316L STAINLESS STEEL DIAPHRAGM MATERIAL	
E) 1/4" FLUSHING PORT IN LOWER HOUSING	
JAMESBURY 1/4-33-3600TL 1/4" 316 S.S. BALL VALVE	1
JAMESBURY 1/2-33-3600TL 1/2" 316 S.S. BALL VALVE	1
1/4" x 2" 316 STAINLESS STEEL NIPPLE	2
1/4" STAINLESS STEEL ELBOW	1
1/2" x 2" 316 STAINLESS STEEL NIPPLE	2
1/2" x 4" 316 STAINLESS STEEL NIPPLE	1

ITEM NO.5

HPP-9 PUMP INLET PRESSURE TRANSMITTER ASSEMBLY

ROSEMOUNT 3051S PRESSURE TRANSMITTER	1
A) RANGE: -14 TO 2000 PSI	
B) OUTPUT: 4-20MADC WITH HART	
C) PROCESS CONN.: 316L TRADITIONAL FLANGE 1/4-18 NPT	
D) HOUSING: ALUMINUM WITH 1/2-14 NPT	
F) DISPLAY: PLANTWEB LCD	
H) ASSEMBLE TO ROSEMOUNT CONVENSIONAL 304 INTEGRAL MANIFOLD	
I) TAGS: **PIT-1940**	
ROSEMOUNT 0304 IN-LINE MANIFOLD WITH THE FOLLOWING:	1
A) MANIFOLD STYLE: THREADED	
B) MANIFOLD TYPE: 2-VALVE	
C) BODY | BONNET | STEM | TIP: SST | SST | SST | 316 SST	
D) PROCESS CONN. 1/2-14 FNPT	
E) PACKING MATERIAL: PTFE	
F) VALVE SEAT: INTEGRAL	
SQD SSP030SSE10HC 4/20MA PIPE STYLE SURGE ARRESTER	1
JAMESBURY 1/2-33-3600TL 1/2" 316 S.S. BALL VALVE	2
1/2" STAINLESS STEEL TEE	1
1/2" x 2" 316 STAINLESS STEEL NIPPLE	3
1/2" x 4" 316 STAINLESS STEEL NIPPLE	1
2" X 60" ALUMINUM PIPE STANCHION W/ 10" X 10" X 1/2" ALUMINUM BASE	1
MISC. BRACKET HARWARE	LOT

ITEM NO.6

HPP-9 PUMP OUTLET PRESSURE GAUGE ASSEMBLY

ASHCROFT 1279 DURAGAUGE PLUS 4.5" DIAL PROCESS GAUGE	1
A) RANGE: 0 TO 200 PSI	
B) 316L STAINLESS STEEL BOURDON TUEB AND SOCKET	
C) 1/2 IN MNPT LOWER STEM CONNECTION	
D) SEAL: BUNA-N	
E) ACRYLIC WINDOW, SILICONE FILL	
F) TAGS: **PI-1942**	
ASHCROFT 02-1112SD-25 PRESSURE SNUBBER, 303 SST. BODY	INCL
ASHCROFT 50-201SS-02T-XCKPUSE SERIES THREADED DIAPHRAGM SEAL	INCL
A) 1/2" NPT FEMALE PROCESS CONNECTION	
B) 1/2" NPT FEMALE INSTRUMENT CONNECTION	
C) 316L STAINLESS STEEL HOUSING	
D) 316L STAINLESS STEEL DIAPHRAGM MATERIAL	
E) 1/4" FLUSHING PORT IN LOWER HOUSING	
JAMESBURY 1/4-33-3600TL 1/4" 316 S.S. BALL VALVE	1
JAMESBURY 1/2-33-3600TL 1/2" 316 S.S. BALL VALVE	1
1/4" x 2" 316 STAINLESS STEEL NIPPLE	2
1/4" STAINLESS STEEL ELBOW	1
1/2" x 2" 316 STAINLESS STEEL NIPPLE	2
1/2" x 4" 316 STAINLESS STEEL NIPPLE	1

ITEM NO.7

HPP-9 PUMP OUTLET PRESSURE TRANSMITTER ASSEMBLY

ROSEMOUNT 3051S PRESSURE TRANSMITTER	1
A) RANGE: -14 TO 2000 PSI	
B) OUTPUT: 4-20MADC WITH HART	
C) PROCESS CONN.: 316L TRADITIONAL FLANGE 1/4-18 NPT	
D) HOUSING: ALUMINUM WITH 1/2-14 NPT	
F) DISPLAY: PLANTWEB LCD	
H) ASSEMBLE TO ROSEMOUNT CONVENSIONAL 304 INTEGRAL MANIFOLD	
I) TAGS: **PIT-1942**	
ROSEMOUNT 0304 IN-LINE MANIFOLD WITH THE FOLLOWING:	1
A) MANIFOLD STYLE: THREADED	
B) MANIFOLD TYPE: 2-VALVE	
C) BODY | BONNET | STEM | TIP: SST | SST | SST | 316 SST	
D) PROCESS CONN. 1/2-14 FNPT	
E) PACKING MATERIAL: PTFE	
F) VALVE SEAT: INTEGRAL	
SQD SSP030SSE10HC 4/20MA PIPE STYLE SURGE ARRESTER	1
JAMESBURY 1/2-33-3600TL 1/2" 316 S.S. BALL VALVE	2
1/2" STAINLESS STEEL TEE	1
1/2" x 2" 316 STAINLESS STEEL NIPPLE	3
1/2" x 4" 316 STAINLESS STEEL NIPPLE	1
2" X 60" ALUMINUM PIPE STANCHION W/ 10" X 10" X 1/2" ALUMINUM BASE	1
MISC. BRACKET HARWARE	LOT

ITEM NO.8

PROJECT SERVICES

ENGINEERING	LOT
SUBMITTALS	LOT
PLC PROGRAMMING	LOT
SCADA PROGRAMMING	LOT

TESTING	LOT
START-UP	LOT
TRAINING	LOT
O & M MANUALS	LOT
WARRANTY, 1-YEAR	LOT

**********BID ALTERNATIVE #1**********

ITEM NO.9

VALVE CONTROL PANEL PCPMOVRO2 MODIFICATIONS (CV-1*20 CONCENTRATE VALVES)

EATON / CUTLER HAMMER AN56BN0AC NEMA SIZE 0 3-PHASE REVERSING STARTER	3
EATON / CUTLER HAMMER H2005B-3 CLASS 20 HEATER PACKS, 1.2-1.96A, 3/CARTON	3
EATON / CUTLER HAMMER GMCP003AOC 3A 3-POLE G-FRAME BREAKER	3
EATON / CUTLER HAMMER 1294C01H01 BREAKER LOCK DOG	3
ALLEN-BRADLEY 1492-GH005 1P 120V 0.5A CIRCUIT BREAKER	3
ALLEN-BRADLEY 1492-GH050 1P 120V 5A CIRCUIT BREAKER	3
WIRES, TERMINALS, NAMEPLATES	LOT

ITEM NO.10

HS1-1620, HS1-1720, HS1-1820 CONCENTRATE VALVES OPERATOR STATION (3 REQ'D)

SQUARE-D 9001SKY3 3-HOLE POLYMERIC CONTROL STATION	3
SQD 9001SKS43B 3 POSITION SELECTOR SWITCH	3
SQD 9001SKR1U 30MM MOMENTARY PUSH BUTTON OPERATOR	6
SQD 9001KA1 30MM CONTACT BLOCK, 10A, (1)NO / (1)NC, SCREW CLAMP TERMINAL	12
LABELS	LOT

ITEM NO.11

MAIN CONTROL PANEL PLC-RO2 MODIFICATIONS

ALLEN-BRADLEY 1756-A7 CONTROLLOGIX 7-SLOT MOUNTING CHASSIS RACK	1
ALLEN-BRADLEY 1756-PA72 CONTROLLOGIX POWER SUPPLY, 85-256VAC, 75W	1
ALLEN-BRADLEY 1756-IB16 CONTROLLOGIX DIGITAL INPUT, 16-POINT, 24VDC	1
ALLEN-BRADLEY 1756-OB16I CONTROLLOGIX ISOLATED DIGITAL OUTPUT, 16-POINT, 12/24VDC	1
ALLEN BRADLEY 1756-TBCH TERMINAL BLOCK, 36-PIN CAGE CLAMP BLOCK	2
PHOENIX CONTACT 2838322 PT 4X1-24DC-ST PLUGTRAB PT SURGE PROTECTION PLUG	4
PHOENIX CONTACT 2839363 PT 4X1-BE PLUGTRAB PT SURGE PROTECTION BASE	4
FINDER 60.13.9.024.0070 60 SERIES RELAYS, 3PDT, 10A, 24VDC, LED	8
FINDER 90.27SMA DIN RAIL 11-PINS RELAY SOCKET, SCREW TERMINAL	8
WIRES, TERMINALS, LABELS	LOT

ITEM NO.12

ADDITONAL PROJECT SERVICES

ENGINEERING	LOT
SUBMITTALS	LOT
PLC PROGRAMMING	LOT
TESTING	LOT
START-UP	LOT
O & M MANUALS	LOT
WARRANTY, 1-YEAR	LOT

SUMMARY		**SELL**
ITEMS NO.1 THRU NO.8	HIGH PRESSURE PUMP #9 ADDITION (BASE BID)	$72,700.00
ITEMS NO.9 TRHU 12	CONCENTRATE PIPING IMPROVEMENTS (BID ALTERNATIVE #1)	$42,700.00

TOTAL: **$115,400.00 PLUS TAX**

SUBMITTAL: 6-8 WEEKS (AFTER RECEIPT OF PURCHASE ORDER)

DELIVERY: 18-20 WEEKS (AFTER APPROVED DRAWINGS)

FOB: JOB SITE

TERMS: NET 30 DAYS (SUBJECT TO CREDIT APPROVAL)

WARRANTY: ALL WARRANTIES SHALL EXPIRE ONE (1) YEAR FROM DATE OF START-UP FROM SELLER TO BUYER UNLESS SPECIALLY INDICATED OTHERWISE AND WILL BE NULL AND VOID UNLESS MATERIALS ARE STORED UNDER PROPER CONDITIONS DETERMINED BY C.C. CONTROL CORP.

JUAN REYES
jreyes@cccontrolcorp.com

SECTION 4 – EXHIBIT R3 CONSTRUCTION SCHEDULE

VOW WTP HPP 9 Improvements | Village of Wellington | 29-Aug-25 08:49

Activity ID	Activity Name	Original Duration	Actual Duration	Remaining Duration	Duration % Complete	Start	Finish	Total Float
VOW WTP HPP 9 Improvements		522	0	522	0%	11-Nov-25	16-Apr-27	0
General Conditions		522	0	522	0%	11-Nov-25	16-Apr-27	0
Administration		522	0	522	0%	11-Nov-25	16-Apr-27	0
Village of Wellington		492	0	492	0%	11-Nov-25	17-Mar-27	0
A1000	Notice of Award	0	0	0	0%	11-Nov-25		0
A1070	Issue Conformed Documents	14	0	14	0%	11-Nov-25	24-Nov-25	0
A1080	Delivery of Owner Furnished Equipment	154	0	154	0%	11-Nov-25	13-Apr-26	126
A1060	Notice to Proceed	0	0	0	0%	25-Nov-25		0
A1110	Furnish Punchlist	14	0	14	0%	04-Mar-27	17-Mar-27	0
Wharton-Smith		242	0	242	0%	17-Aug-26	16-Apr-27	0
A1360	Mobilization	5	0	5	0%	17-Aug-26	24-Aug-26	0
A1330	Substantial Completion	0	0	0	0%		03-Mar-27	0
A1340	Punchlist	30	0	30	0%	18-Mar-27	16-Apr-27	0
A1350	Final Completion	0	0	0	0%		16-Apr-27	0
Permits		30	0	30	0%	25-Nov-25	24-Dec-25	243
A1010	Obtain Building Permit	30	0	30	0%	25-Nov-25	24-Dec-25	243
Procurement		266	0	266	0%	25-Nov-25	17-Aug-26	174
Submittals		70	0	70	0%	25-Nov-25	02-Feb-26	342
A1120	Submit Control Valves and Pipe Accessories	56	0	56	0%	25-Nov-25	19-Jan-26	0
A1370	Submit Instrumentation & Controls	56	0	56	0%	25-Nov-25	19-Jan-26	275
A1410	Submit SS Piping	70	0	70	0%	25-Nov-25	02-Feb-26	56
A1520	Submit Cartridge Filters	28	0	28	0%	25-Nov-25	22-Dec-25	282
A1570	Submit Coatings	28	0	28	0%	25-Nov-25	22-Dec-25	384
A2150	Submit Electrical	70	0	70	0%	25-Nov-25	02-Feb-26	261
Review and Approve		56	0	56	0%	23-Dec-25	16-Feb-26	342
A1530	Engineer Review & Approve Cartridge Filters	14	0	14	0%	23-Dec-25	05-Jan-26	282
A1190	Engineer Review & Approve Coatings	14	0	14	0%	23-Dec-25	05-Jan-26	384
A1130	Engineer Review & Approve Control Valves & Pipe Accessories	14	0	14	0%	20-Jan-26	02-Feb-26	0
A1380	Engineer Review & Approve Instrumentation & Controls	14	0	14	0%	20-Jan-26	02-Feb-26	275
A1420	Engineer Review & Approve SS Piping	14	0	14	0%	03-Feb-26	16-Feb-26	56
A2160	Engineer Review & Approve Electrical Shop Drawings	14	0	14	0%	03-Feb-26	16-Feb-26	261
Fabrication and Delivery		224	0	224	0%	06-Jan-26	17-Aug-26	174
A1540	Fabricate & Deliver Cartridge Filters	28	0	28	0%	06-Jan-26	02-Feb-26	282
A1200	Fabricate & Deliver Coatings	14	0	14	0%	06-Jan-26	19-Jan-26	384
A1140	Fabricate & Deliver Control Valves & Pipe Accessories	196	0	196	0%	03-Feb-26	17-Aug-26	0
A1390	Fabricate & Deliver Instrumentation & Controls	84	0	84	0%	03-Feb-26	27-Apr-26	275
A1430	Fabricate & Deliver SS Piping	126	0	126	0%	17-Feb-26	22-Jun-26	56
A2180	Fabricate & Deliver Electrical Materials	56	0	56	0%	17-Feb-26	13-Apr-26	261
Base Bid - Const. HPP9, Micron Filter, Piping Imps, and HPPs 6, 7, & 8 Mods		191	0	191	0%	24-Aug-26	03-Mar-27	44
HPP 6		25	0	25	0%	24-Aug-26	28-Sep-26	112
A1950	HPP 6 Piping & Valve Modifications	10	0	10	0%	24-Aug-26	07-Sep-26	0
A1960	HPP 6 Electrical Modifications	10	0	10	0%	07-Sep-26	21-Sep-26	112
A1970	HPP 6 Instrumentation & Controls Modifications	5	0	5	0%	21-Sep-26	28-Sep-26	112
HPP 7		25	0	25	0%	20-Oct-26	24-Nov-26	103
A1880	HPP 7 Piping & Valve Modifications	10	0	10	0%	20-Oct-26	03-Nov-26	0
A1890	HPP 7 Electrical Modifications	10	0	10	0%	03-Nov-26	17-Nov-26	103
A1900	HPP 7 Instrumentation & Controls Modifications	5	0	5	0%	17-Nov-26	24-Nov-26	103
HPP 8		25	0	25	0%	16-Dec-26	20-Jan-27	30
A1500	HPP 8 Piping & Valve Modifications	10	0	10	0%	16-Dec-26	30-Dec-26	0
A1670	HPP 8 Electrical Modifications	10	0	10	0%	30-Dec-26	13-Jan-27	30
A1680	HPP 8 Instrumentation & Controls Modifications	5	0	5	0%	13-Jan-27	20-Jan-27	30
HPP 9		177	0	177	0%	25-Aug-26	17-Feb-27	0
A1590	Form/Reinforce/Pour Cartridge Filter Vessel Pad	5	0	5	0%	25-Aug-26	31-Aug-26	57
A1700	Cure/Strip Cartridge Filter Vessel Pad	28	0	28	0%	01-Sep-26	28-Sep-26	79
A1560	Install Cartridge Filter Vessel	5	0	5	0%	28-Sep-26	05-Oct-26	57
A1600	Install Cartridge Filter Piping & Valves	5	0	5	0%	05-Oct-26	12-Oct-26	57
A1510	Install HPP 9	5	0	5	0%	16-Dec-26	23-Dec-26	0
A1550	Install HPP 9 Piping & Valves	5	0	5	0%	23-Dec-26	30-Dec-26	0
A1650	HPP 9 Electrical Modifications	15	0	15	0%	30-Dec-26	20-Jan-27	0

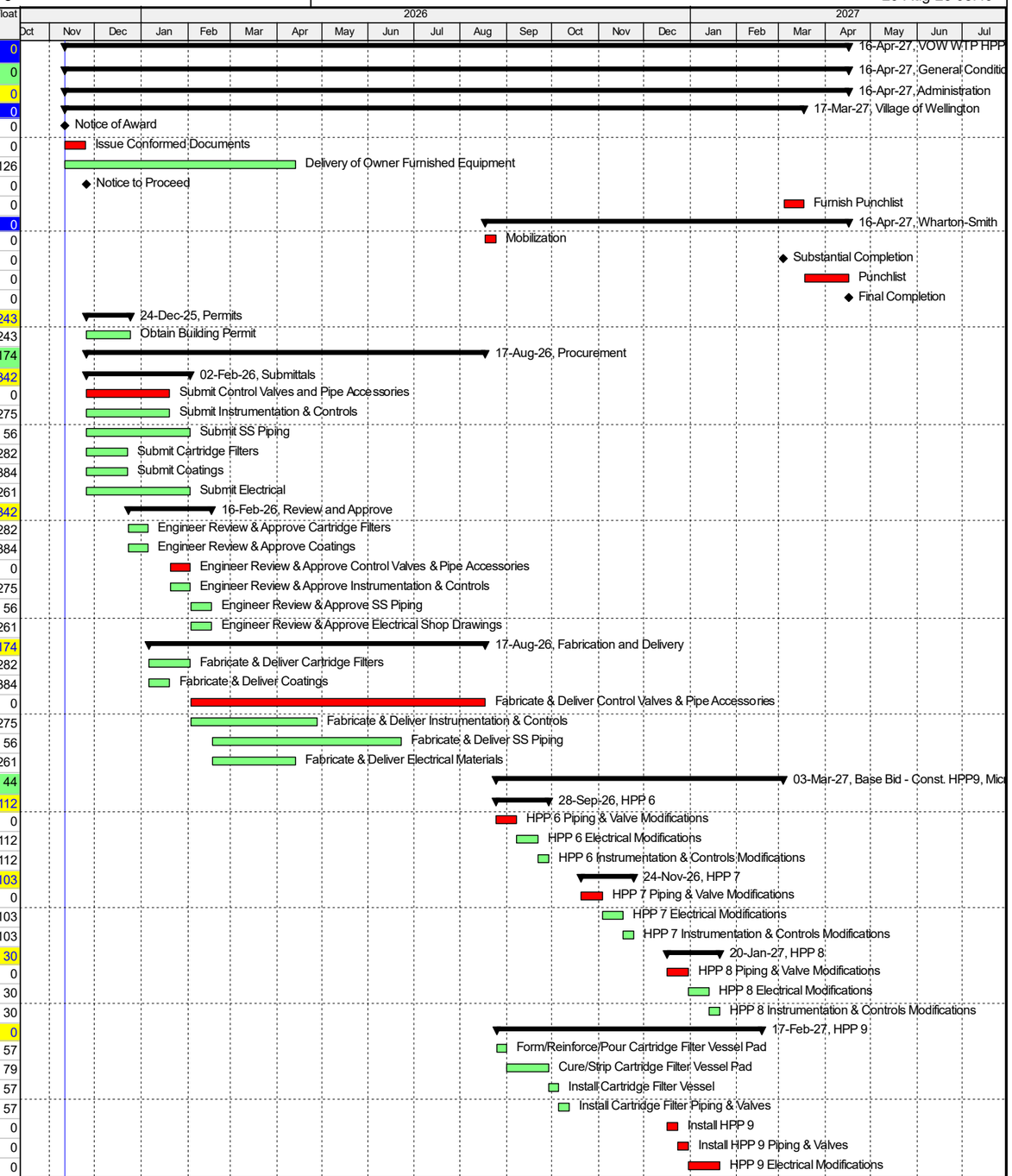

Actual Work | Remaining Work | Critical Remaining Work | Milestone | Summary

Wellington High Pressure Pump 9 Improvements
Owner: Village of Wellington
Engineer: Kimley-Horn
Contractor: Wharton-Smith Construction Group

Data Date: 11-Nov-25
Finish Date: 16-Apr-27
Page 1 of 2

VOW WTP HPP 9 Improvements | Village of Wellington | 29-Aug-25 08:49

Activity ID	Activity Name	Original Duration	Actual Duration	Remaining Duration	Duration % Complete	Start	Finish	Total Float
A1640	Install Variable Frequency Drive	5	0	5	0%	20-Jan-27	27-Jan-27	0
A1660	HPP 9 Instrumentation & Controls Modifcations	10	0	10	0%	27-Jan-27	10-Feb-27	0
A1620	HPP 9 Painting & Coatings	3	0	3	0%	28-Jan-27	30-Jan-27	11
A1630	HPP 9 Piping & Valve Modifications Tie-In	5	0	5	0%	10-Feb-27	17-Feb-27	0
Start Up & Testing		10	0	10	0%	17-Feb-27	03-Mar-27	0
A1580	Start Up & Test HPP 9 & Cartridge Filter	10	0	10	0%	17-Feb-27	03-Mar-27	0
Alt Bid - Concentrate Piping Improvements Trains 6, 7, & 8		112	0	112	0%	08-Sep-26	11-Feb-27	14
NF Train 6 Modifications		25	0	25	0%	08-Sep-26	13-Oct-26	0
A2060	Train 6 Pipe and Valve Modifications	5	0	5	0%	08-Sep-26	15-Sep-26	0
A2070	Train 6 Electrical Modifications	15	0	15	0%	15-Sep-26	06-Oct-26	0
A2080	Train 6 Instrumentation & Controls Modifcations	5	0	5	0%	06-Oct-26	13-Oct-26	0
NF Train 7 Modifications		25	0	25	0%	04-Nov-26	09-Dec-26	0
A2020	Train 7 Pipe and Valve Modifications	5	0	5	0%	04-Nov-26	11-Nov-26	0
A2030	Train 7 Electrical Modifications	15	0	15	0%	11-Nov-26	02-Dec-26	0
A2040	Train 7 Instrumentation & Controls Modifcations	5	0	5	0%	02-Dec-26	09-Dec-26	0
NF Train 8 Modifications		25	0	25	0%	31-Dec-26	04-Feb-27	14
A1710	Train 8 Pipe and Valve Modifications	5	0	5	0%	31-Dec-26	07-Jan-27	14
A1720	Train 8 Electrical Modifications	15	0	15	0%	07-Jan-27	28-Jan-27	14
A1730	Train 8 Instrumentation & Controls Modifcations	5	0	5	0%	28-Jan-27	04-Feb-27	14
Start Up & Testing		87	0	87	0%	13-Oct-26	11-Feb-27	14
A2110	Start Up & Test Train 6 Concentrate Control Valves	5	0	5	0%	13-Oct-26	20-Oct-26	0
A2100	Start Up & Test Train 7 Concentrate Control Valves	5	0	5	0%	09-Dec-26	16-Dec-26	0
A1310	Start Up & Test Train 8 Concentrate Control Valves	5	0	5	0%	04-Feb-27	11-Feb-27	14

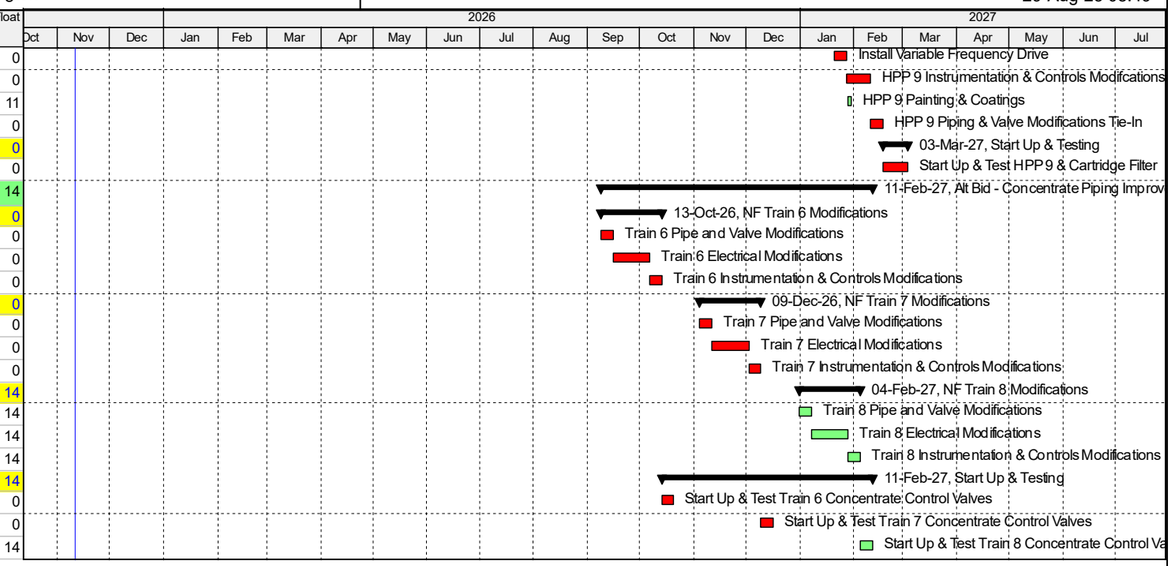

Actual Work
Remaining Work
Critical Remaining Work
Milestone
Summary

Wellington High Pressure Pump 9 Improvements
Owner: Village of Wellington
Engineer: Kimley-Horn
Contractor: Wharton-Smith Construction Group

Data Date: 11-Nov-25
Finish Date: 16-Apr-27
Page 2 of 2

SECTION 5 – EXHIBIT R4 CONSTRUCTION MANAGER'S ALLOWANCES

The GMP includes the following Allowances for work items with undefined scopes at this time. Please note that the allowances are currently shown below the line without fee, fee to be included on allowance usage once brought into the project as approved by the Village of Wellington.

- Base Bid:
  a. Coatings - $35,000
  b. Independent Testing - $10,000
  c. Flow Meter Installation - $130,000

- Alternate Bid: None

SECTION 6 – EXHIBIT R5 ASSUMPTIONS AND CLARIFICATIONS

Please note the following assumptions and clarifications regarding this proposal:

1. The work is in accordance with Kimley-Horn's "Membrane Plant #2 (M2) High Pressure Pump 9 Improvements" conformed documents dated May 2025. Please refer to Section 2 for the Drawings and Specifications.
2. The GMP includes work for High Pressure Pump 9 along with the associated piping and Trains 6, 7, and 8 concentrate piping modifications. Pricing for the bid proposals received will remain valid for a period of one hundred and eighty (180) days after the bid date.
3. We have included an Owner Controlled Contingency of $98,829.00. Please note that this contingency is currently shown below the line without fee, fee to be included on contingency usage once brought into the project as approved by the Village of Wellington.
4. We have included the following allowances for work items with undefined scopes at this time. Please note that the allowances are currently shown below the line without fee, fee to be included on allowance usage once brought into the project as approved by the Village of Wellington.
    a. Coatings - $35,000
    b. Independent Testing - $10,000
    c. Flow Meter Installation - $130,000
5. We have included a performance and payment bond and insurance.
6. ERP, FDEP, FDOT, & ROW permit fees are by others.
7. Village of Wellington Building Department fees are by others.
8. Costs associated with Davis-Bacon Wages & AIS requirements have not been included.
9. It is assumed that the Village of Wellington will provide power and water for use during construction and startup at no cost.
10. We have not included any costs for Lead/Asbestos Survey nor abatement of any kind.
11. Pricing includes no knowledge of buried or concealed conditions beyond what is indicated or shown on documents received to date. Unforeseen conflicts and utilities will be submitted as additional costs.
12. All Pricing (Labor, Material, Equipment, Subcontract) is based on current market value with no escalation or inflation adjustment. Duration of Material lead times are based on current market conditions.
13. The following is Owner furnished equipment:
    a. High Pressure Pump 9, Motor and Can
    b. Cartridge Filter Housing
    c. Micron Filters
    d. VFD
14. Owner furnished Equipment is subject to Engineer's shop drawing submittal review and approval. The Equipment services and features specified within Bid Documents are to be verified by Direct Purchaser prior to their system integration by Contractor.
15. We have included administrative costs to coordinate field services with Owner furnished equipment vendors. This is limited to communication and scheduling. Wharton Smith and subcontractors are not responsible for delays associated with these vendors.
16. Procurement, review, submission, and copies of Operation and Maintenance Manuals for Owner Furnished Equipment is excluded. It is the Owner's responsibility to coordinate this effort and share all pertinent information with Wharton Smith in a timely manner.
17. All work required per Specification Section 02670 *Flushing, Testing and Disinfection* is excluded as no discharge and bacteriological sampling locations have been identified in the bid drawings. Wharton Smith responsibility will be limited to swabbing all new piping to be installed on the Raw Water Feed System. If

required, additional form of disinfection, temporary piping, flushing, and bacteriological sampling will be coordinated with the Owner and submitted as additional cost.

18. Spare Parts for all Owner Furnished Equipment are excluded.
19. Factory testing for all Owner Furnished Equipment is excluded. This includes coordinating, reviewing test reports, and submission.
20. Vibration testing costs per Specification Section 11936 *Vertical Turbine High Pressure Pump* and Specification Section 13080 *Vibration and Alignment*, are excluded as these costs were carried by Afton for Owner Furnished HPP 9. Wharton Smith responsibility will be limited to coordinating with Afton.
21. Part 1 of Specification Sections 16480 and 16485/16495 is excluded since the manufacturer's services were included in the direct Purchase Order from the Village of Wellington to Schneider.
22. Offloading and storage of Owner Furnished Equipment is excluded.
23. Part 3.1 of Specification Section 16485/16495 states that a 10% payment retainage will be released to Contractor upon final acceptance of the work. Per Executed CMAR Agreement, a 5% retainage will be held.
24. Additional material cost or delays to the Project Schedule due to Owner or Owner's contracted Supplier will be assessed and Contractor reserves the right to submit any applicable claims within the Terms and Conditions of the Contract.
25. It is assumed that the 10" 90° bends can be modified and reinstalled, therefore, we have included cost for these modifications per General Note No. 9 on Sheet M-2. If for reasons outside of our control, new 90° bends are required, a Contingency Authorization Request will be submitted for the additional cost.
26. Cost to modify existing grating is included as shown in the bid documents. Additional modifications will be submitted as additional cost.
27. As requested by the Village of Wellington, cost to furnish the micron filters is not included.
28. Coiling, hanging, or arranging of existing wiring and other items present within existing PLC-RO2 or PCPMOVRO2 is excluded.
29. Contractor has excluded cost to perform post-construction inspection referenced in Spec Section 01700-1.9. It is the Owner's responsibility to send notification of any deficiencies concerning material, equipment, and workmanship furnished by Wharton Smith within the warranty period established in the bid documents. Deficiencies relating to Owner Furnished Equipment will be the sole responsibility of the Owner.
30. It is assumed that Engineer and Owner will review and return submittals within 14 calendar days. RFIs and resubmittals shall be returned within 7 calendar days.
31. It is assumed that Contractor will utilize the Owner's existing gantry crane and that the crane's capacity is sufficient for the cartridge filter and HPP. Should the gantry crane capacity not be sufficient, Contractor will seek alternate method of hoisting for additional cost.
32. Pricing only includes materials and equipment specified in the bid documents. As there are no references to the Village's Approved Product List (APL), those approved products have been excluded.
33. Please refer to Section 4 for the proposed GMP schedule. Please note that the P6 schedule is referenced in "work days" as the program automatically accounts for weekends and holidays. The contract time is expressed in "calendar days". 508 calendar days from Notice of Commencement to Final Completion indicated equates to the 522 work days shown in the P6 schedule. Our current estimated duration of on-site construction is 8 months.

SECTION 7 – EXHIBIT R6 LIST OF EXTENDED WARRANTIES

The Construction Manager's warranty and the warranty of all subcontractors and suppliers will be in accordance with the Construction Manager at Risk Agreement and the Contract Documents. All work shall be warranted for a period of one (1) year from date of final acceptance by the owner or the manufacturer's standard warranty period, whichever is greater.

Extended warranties as required by the contract specifications will be furnished to the Owner during the closeout phase and prior to receipt of final payment.

SECTION 8 – EXHIBIT R7 GENERAL CONDITIONS AND GENERAL REQUIREMENTS

Wharton–Smith, Inc.
CONSTRUCTION GROUP

JOB NAME: VOW WTP Membrane Plant #2 (M2) HPP 9 Improvements - BASE
ESTIMATE #: 1

GENERAL CONDITIONS

1600 DIRECT MANHOURS | 40 MANWEEKS
DURATION = 5 MONTHS, PLANNED | 2 MEN

DESCRIPTION	QTY	UNIT	MH/ UNIT	BASE RATE	LABOR U/P	LABOR TOTAL MH	LABOR $ AMOUNT	HR/UNIT	EQUIPMENT RATE	EQUIPMENT $ AMOUNT	MATERIAL U/P	MATERIAL $ AMOUNT	MATERIAL $ AMOUNT	SUBCONTRACTS U/P	SUBCONTRACTS $ AMOUNT	$ TOTALS
PROJECT MANAGEMENT TEAM													W/ 7% TAX			
FIELD STAFF																
SUPERINTENDENT	22	WK	40	$157.00	$6,280	$866	$135,962			$0		$0	$0		$0	$135,962
OFFICE STAFF																
PROJECT MANAGER	22	WK	40	$157.00	$6,280	$866	$135,962			$0		$0	$0		$0	$135,962
PROJECT ENGINEER	22	WK	40	$96.00	$3,840	$866	$83,136			$0		$0	$0		$0	$83,136
PROJECT ASSISTANT	22	WK	24	$80.00	$1,920	$520	$41,568			$0		$0	$0		$0	$41,568
OTHER STAFF																
COST ACCOUNTANT	22	WK	16	$124.00	$1,984	$346	$42,954			$0		$0	$0		$0	$42,954
SAFETY COORDINATOR	22	WK	4	$140.00	$560	$87	$12,124			$0		$0	$0		$0	$12,124
RELATED MANAGEMENT COSTS																
SOFTWARE COSTS	1	LS		$50.00	$0	$0	$0			$0		$0	$0	$3,932	$3,932	$3,932
TEMP.FACILITIES & UTILITIES																
WATER, MONTHLY	5	MO		$50.00	$0	$0	$0			$0	$250	$1,250	$1,338		$0	$1,338
INTERNET/TELEPHONE, MONTHLY CHARGES - W-S	5	MO		$50.00	$0	$0	$0			$0	$200	$1,000	$1,070		$0	$1,070
CELLULAR TELEPHONE, MONTHLY CHARGES	5	MO		$50.00	$0	$0	$0			$0	$300	$1,500	$1,605		$0	$1,605
FIELD OFFICE, WHARTON SMITH INC	5	MO	5	$50.00	$250	$25	$1,250			$0	$8,000	$40,000	$42,800		$0	$44,050
JOB OFFICE SUPPLIES	5	MO		$50.00	$0	$0	$0			$0	$750	$3,750	$4,013		$0	$4,013
COMPUTER EQUIPMENT FOR FIELD OFFICE - W-S	1	LS		$50.00	$0	$0	$0			$0	$2,000	$2,000	$2,140		$0	$2,140
TOOL TRAILERS - 1 REQUIRED	5	MO		$50.00	$0	$0	$0			$0	$250	$1,250	$1,338		$0	$1,338
TEMPORARY TOILETS - 1 REQUIRED	5	MO		$50.00	$0	$0	$0			$0	$150	$750	$803		$0	$803
TEMPORARY SEWAGE HOLDING TANKS - ENGINEER & W-S	5	MO		$50.00	$0	$0	$0			$0	$300	$1,500	$1,605		$0	$1,605
CONSTRUCTION EQUIPMENT & TOOLS																
SMALL TOOLS AND SUPPLIES	1	LS		$50.00	$0	$0	$0			$0	$4,800	$4,800	$5,136		$0	$5,136
SAFETY & HEALTH & HOUSEKEEPING																
SAFETY DEVICES	1	LS		$50.00	$0	$0	$0			$0	$3,000	$3,000	$3,210		$0	$3,210
CLEAN-UP AT END OF PROJECT	1	LS	80	$50.00	$4,000	$80	$4,000			$0		$0	$0		$0	$4,000
CLEAN-UP THROUGHOUT DURATION OF PROJECT	22	WK	4	$50.00	$200	$87	$4,330			$0		$0	$0		$0	$4,330
DUMPSTERS	5	MO		$50.00	$0	$0	$0			$0	$1,250	$6,250	$6,688		$0	$6,688
JANITORIAL	22	WK		$50.00	$0	$0	$0			$0		$0	$0	$280	$6,062	$6,062
TOTAL GENERAL CONDITIONS						$3,742	$461,287			$0			$71,744		$9,994	**$543,023**

GENERAL REQUIREMENTS

PERMITS, FEES, INSURANCE, LEGAL, ETC.																
BUILDER'S RISK INSURANCE-COASTAL COUNTY	5	MO		$50.00	$0	$0	$0			$0		$0	$0	$250	$2,850	$2,850
PROJECT DOCUMENTATION AND SERVICES																
PHOTOGRAPHS	5	MO		$50.00	$0	$0	$0			$0	$150	$750	$803		$0	$803
PRE-CONSTRUCTION AUDIO-VIDEO DOCUMENTATION	1	LS		$50.00	$0	$0	$0			$0		$0	$0	$2,500	$2,500	$2,500

Wharton–Smith, Inc.
CONSTRUCTION GROUP

JOB NAME: VOW WTP Membrane Plant #2 (M2) HPP 9 Improvements - BASE
ESTIMATE #: 1

DESIGN SERVICES (CADD) - AS-BUILTS	1	LS	40	$65.00	$2,600	$40	$2,600			$0		$0	$0		$0	$2,600
PLANS & SPECIFICATIONS REPRODUCTION COSTS	1	LS		$50.00	$0	$0	$0			$0	$1,500	$1,500	$1,605		$0	$1,605
TOTAL GENERAL REQUIREMENTS						$40	$2,600			$0			$2,408		$5,351	**$10,358**

Wharton–Smith, Inc.
CONSTRUCTION GROUP

JOB NAME: VOW WTP Membrane Plant #2 (M2) HPP 9 Improvements - BASE
ESTIMATE #: 1

GENERAL CONDITIONS

960 DIRECT MANHOURS | 24 MANWEEKS
DURATION = 2.0 MONTHS, PLANNED | 1 MEN

DESCRIPTION	QTY	UNIT	MH/ UNIT	BASE RATE	LABOR U/P	LABOR TOTAL MH	LABOR $ AMOUNT	HR/UNIT	EQUIPMENT RATE	EQUIPMENT $ AMOUNT	MATERIAL U/P	MATERIAL $ AMOUNT	MATERIAL $ AMOUNT	SUBCONTRACTS U/P	SUBCONTRACTS $ AMOUNT	$ TOTALS
PROJECT MANAGEMENT TEAM													W/ 7% TAX			
FIELD STAFF																
SUPERINTENDENT	9	WK	24	$157.00	$3,768	$208	$32,706			$0		$0	$0		$0	$32,706
OFFICE STAFF																
PROJECT MANAGER	9	WK	16	$157.00	$2,512	$139	$21,804			$0		$0	$0		$0	$21,804
PROJECT ENGINEER	9	WK	24	$96.00	$2,304	$208	$19,999			$0		$0	$0		$0	$19,999
PROJECT ASSISTANT	9	WK	8	$80.00	$640	$69	$5,555			$0		$0	$0		$0	$5,555
OTHER STAFF																
COST ACCOUNTANT	9	WK	4	$124.00	$496	$35	$4,305			$0		$0	$0		$0	$4,305
SAFETY COORDINATOR	9	WK	4	$140.00	$560	$35	$4,861			$0		$0	$0		$0	$4,861
RELATED MANAGEMENT COSTS																
SOFTWARE COSTS	1	LS		$50.00	$0	$0	$0			$0		$0	$0	$880	$880	$880
TEMP.FACILITIES & UTILITIES																
WATER, MONTHLY	2	MO		$50.00	$0	$0	$0			$0	$250	$500	$535		$0	$535
INTERNET/TELEPHONE, MONTHLY CHARGES - **W-S**	2	MO		$50.00	$0	$0	$0			$0	$200	$400	$428		$0	$428
CELLULAR TELEPHONE, MONTHLY CHARGES	2	MO		$50.00	$0	$0	$0			$0	$300	$600	$642		$0	$642
FIELD OFFICE, WHARTON SMITH INC	2	MO	5	$50.00	$250	$10	$500			$0	$8,000	$16,000	$17,120		$0	$17,620
JOB OFFICE SUPPLIES	2	MO		$50.00	$0	$0	$0			$0	$750	$1,500	$1,605		$0	$1,605
COMPUTER EQUIPMENT FOR FIELD OFFICE - **W-S**	1	LS		$50.00	$0	$0	$0			$0	$2,000	$2,000	$2,140		$0	$2,140
TOOL TRAILERS - __1__ **REQUIRED**	2	MO		$50.00	$0	$0	$0			$0	$250	$500	$535		$0	$535
TEMPORARY TOILETS - __1__ **REQUIRED**	2	MO		$50.00	$0	$0	$0			$0	$150	$300	$321		$0	$321
TEMPORARY SEWAGE HOLDING TANKS - **ENGINEER & W-S**	2	MO		$50.00	$0	$0	$0			$0	$300	$600	$642		$0	$642
CONSTRUCTION EQUIPMENT & TOOLS																
SMALL TOOLS AND SUPPLIES	1	LS		$50.00	$0	$0	$0			$0	$2,880	$2,880	$3,082		$0	$3,082
SAFETY & HEALTH & HOUSEKEEPING																
SAFETY DEVICES	1	LS		$50.00	$0	$0	$0			$0	$1,000	$1,000	$1,070		$0	$1,070
CLEAN-UP AT END OF PROJECT	1	LS	40	$50.00	$2,000	$40	$2,000			$0		$0	$0		$0	$2,000
CLEAN-UP THROUGHOUT DURATION OF PROJECT	9	WK	4	$50.00	$200	$35	$1,736			$0		$0	$0		$0	$1,736
DUMPSTERS	2	MO		$50.00	$0	$0	$0			$0	$1,250	$2,500	$2,675		$0	$2,675
JANITORIAL	9	WK		$50.00	$0	$0	$0			$0		$0	$0	$280	$2,430	$2,430
TOTAL GENERAL CONDITIONS						$779	$93,467			$0			$30,795		$3,310	**$127,571**

GENERAL REQUIREMENTS

PERMITS, FEES, INSURANCE, LEGAL, ETC.																
BUILDER'S RISK INSURANCE-**COASTAL COUNTY**	2	MO		$50.00	$0.00	0.00	0.00			$0		$0	$0	$75	$150	$150
TOTAL GENERAL REQUIREMENTS						0.00	0.00			$0			$0		$150	**$150**

SECTION 9 – EXHIBIT R8 SUBMITTAL SCHEDULE

Wharton-Smith, Inc.
CONSTRUCTION GROUP

Submittal Log: WTP Membrane Plant #2 (M2) High Pressure Pump 9 Improvements					
Package	**Submittal**	**Rev.**	**Title**	**Status**	**Comments**
Div. 01			Schedule of Values	UNS	
			Preconstruction Video	UNS	
			Construction Schedule	UNS	
Div. 03			Concrete	UNS	
			Concrete Reinforcement	UNS	
Div. 09			Painting & Coatings	UNS	
Div. 11			Cartridge Filter Elements	UNS	
			Control Valves and Pipe Accessories	UNS	
Div. 15			Stainless Steel Piping	UNS	
Div. 16			Electrical	UNS	
Div. 17			Instrumentation & Controls	UNS	