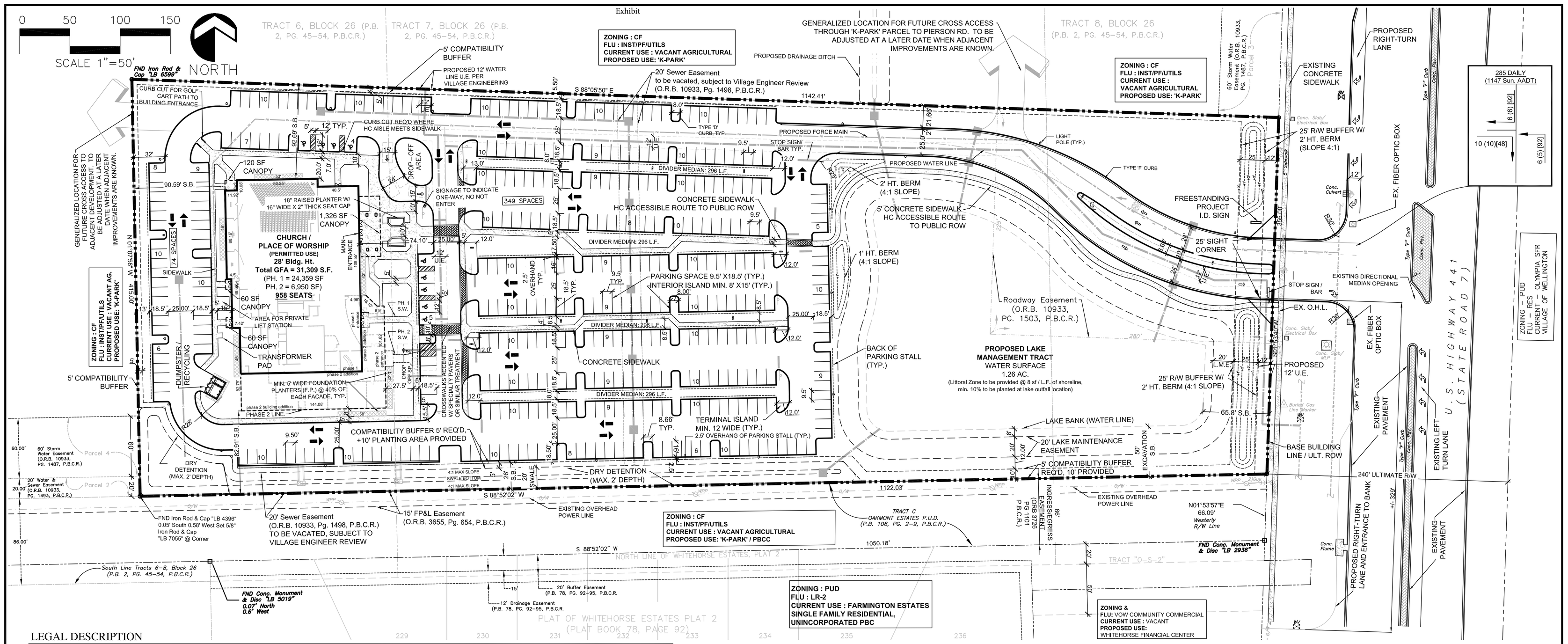

LEGAL DESCRIPTION

PARCEL 1
A parcel of land included within Tracts 6 through 8, less the South 86 feet of Tracts 6 through 8 and less the right-of-way for State Road 7 as now laid out, Block 26, of the PALM BEACH FARMS COMPANY PLAT NO. 3, according to the Plat thereof, as recorded in Plat Book 2, Pages 45 to 54, of the Public Records of Palm Beach County, Florida, being more particularly described as follows:

A certain parcel of land lying in Section 24, Township 44 South, Range 41 East, Palm Beach County, Florida, being a portion of Tracts 6, 7 and 8, in Block 26, PALM BEACH FARMS COMPANY PLAT NO. 3, as same is recorded in Plat Book 2, Pages 45 through 54, Public Records of Palm Beach County, Florida, being more particularly described as follows:

COMMENCING at a point on the Westerly right-of-way line of U.S. Highway 441 (State Road No. 7) as same is depicted on the Florida Department of Transportation Right-of-Way Map Section 93210-2519 and the North line of WHITEHORSE ESTATES PLAT 2, as same is recorded in Plat Book 78, Page 92, Public Records of Palm Beach County, Florida; Thence from said POINT OF COMMENCEMENT, North 01°53'57" East (the North line of said WHITEHORSE ESTATES PLAT 2 is assumed to bear South 88°52'02" West and all other bearings mentioned herein are relative thereto) along said Westerly right-of-way line, a distance of 66.09 feet to the POINT OF BEGINNING; Thence, from said POINT OF BEGINNING, South 88° 52'02" West along a line 66.00 feet North of as measured at right angles thereto, from said North line of WHITEHORSE ESTATES PLAT 2, (said line also being 86.00 feet North of, as measured at right angles thereto, the South line of said Tracts 6, 7 and 8) a distance 1122.03 feet; Thence North 01°07'58" West, a distance of 415.00 feet; Thence South 88°05'50" East. a distance of 1142.41 feet to a point on said Westerly right-of-way line of State Road No. 7; Thence South 01°53'57" west, along said Westerly right-of-way line, a distance of 355.00 feet to the POINT OF BEGINNING.

PARCEL 2
A non-exclusive easement lying within a portion of Tracts 5 and 6, Block 26, of the PALM BEACH FARMS COMPANY PLAT NO. 3, according to the Plat thereof, as recorded in Plat Book 2, Pages 45 to 54, inclusive, of the Public Records of Palm Beach County, Florida, being more particularly described as follows:

The North 20 feet of the South 106 feet of said Tracts 5 and 6, Block 26, the PALM BEACH FARMS COMPANY PLAT NO. 3, bounded on the east by a line 1122.83 feet West of the Westerly right-of-way line of U.S. Highway 441 (State Road No. 7), as shown on the Florida Department of Transportation right-of-way map, section 93210-2519, and bounded on the West by the Easterly right-of-way line of Lake Worth Drainage District Canal S-6, as now laid out and in use.

PARCEL 3
A non-exclusive easement lying within a portion of Tracts 7 and 8, Block 26, of the PALM BEACH FARMS COMPANY PLAT NO. 3, according to the plat thereof, as recorded in Plat Book 2, Pages 45 to 54, inclusive, of the Public Records of Palm Beach County, Florida, being more particularly described as follows:

COMMENCING at the point of intersection of the Westerly right-of-way line of U.S. Highway 441 (State Road No. 7), as shown on the Florida Department of Transportation right-of-way map, section 93210-2519, with the North line of WHITEHORSE ESTATES PLAT 2, as same is recorded in Plat Book 78, Page 92, of the Public Records of Palm Beach County, Florida; Thence North 01° 53' 57" East (bearing as cited herein relative to the North line of said Plat of WHITEHORSE ESTATES PLAT 2, which bears South 88° 52' 02" West) along the Westerly right-of-way line of U.S. Highway 441, a distance of 421.09 feet to the Northeast corner of the church parcel; Thence South 01° 05' 52" East, along the North line of said church parcel, a distance of 30.00 feet to the POINT OF BEGINNING, and the centerline of a 60 foot wide easement, lying 30 feet on each side of the following described line; Thence North 01° 53' 57" East, a distance of 335 feet more or less to the existing crossover drainage culvert of U.S. Highway 441 and the terminus of this easement.

PARCEL 4
A non-exclusive easement lying within a portion of said Tracts 5 and 6, Block 26, of the PALM BEACH FARMS COMPANY PLAT NO. 3, according to the Plat thereof, as recorded in Plat Book 2, Pages 45 to 54, inclusive, of the Public Records of Palm Beach County, Florida, being more particularly described as follows:

The North 60 feet of the South 166 feet of said Tracts 5 and 6, Block 26, the PALM BEACH FARMS COMPANY PLAT NO. 3, bounded on the East by a line 1122.83 feet West of the Westerly right-of-way line of U.S. Highway 441 (State Road No. 7), as shown on the Florida Department of Transportation right-of-way map, section 93210-2519, and bounded on the West by the Easterly right-of-way line of Lake Worth Drainage District Canal S-6, as now laid out and in use.

LOCATION MAP

NTS

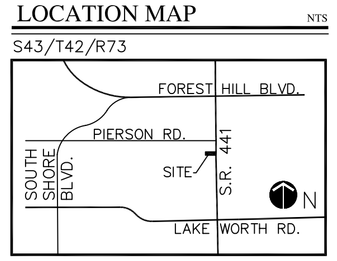

DEVELOPMENT TEAM

OWNER/ DEVELOPER:	**LIFE COVENANT CHURCH, INC.** 4600 E. 2nd Street Edmond, OK 73034-7550
SURVEYOR & CIVIL ENGINEER:	**Wantman Group, Inc.** 2035 Vista Parkway, Suite 100, West Palm Beach, FL 33411 561.687.2220
ARCHITECT:	**THE SMALL GROUP** 13 South Broadway Edmond, OK 73034 (405) 840-1111
TRAFFIC ENGINEER:	**SIMMONS & WHITE** 5601 Corporate Way, Suite 200 West Palm Beach, FL 33407 (561) 478-7848
PLANNER / LANDSCAPE ARCHITECT:	**KILDAY & ASSOCIATES, INC.** 1551 Forum Place Suite 100a West Palm Beach, FL 33401 (561) 689-5522

TYP. SIGN DETAIL

* NOTE: Actual sign detail and specifications to be submitted with ARB application for review & approval

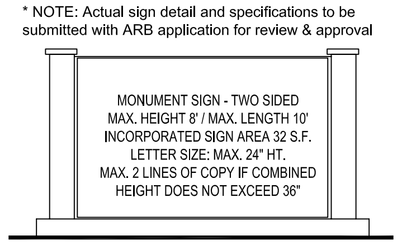

TYP. LIGHT POLE DETAIL

** DETAIL PROVIDED FOR ILLUSTRATIVE PUPOSES ONLY. FINAL SELECTION OF SITE LIGHTING TO BE DONE AT TIME OF BUILDING PERMIT APPLICATION.

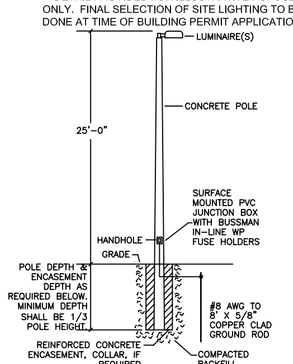

DUMPSTER / RECYCLING DETAIL

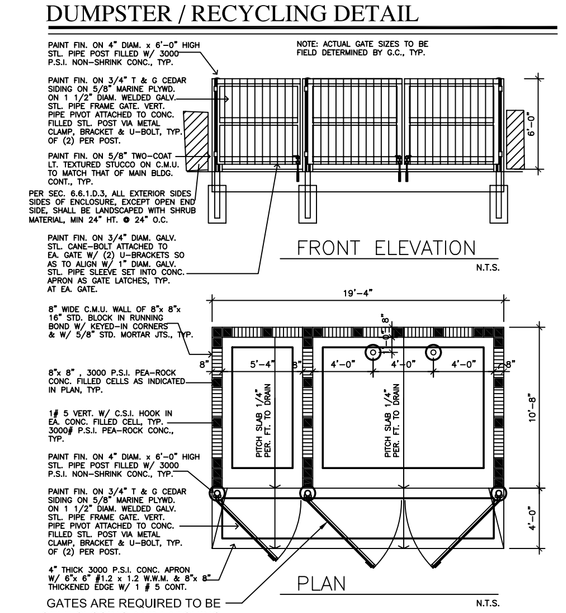

HANDICAP PARKING DETAIL

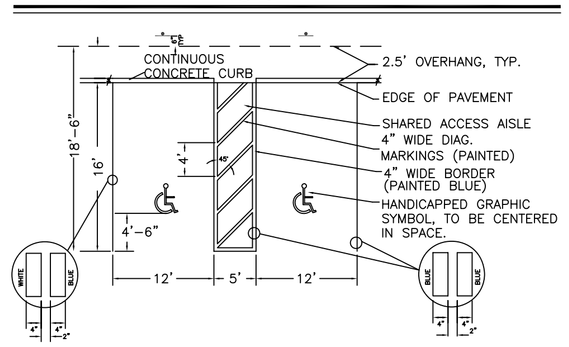

SITE DATA

WELLINGTON PROJECT #	**08-00001319**
PETITION #	**2002-005**
PROPERTY ADDRESS	**3061 STATE ROAD 7**
EXISTING LAND USE DESIGNATION	**INST / PF / UTILS**
EXISTING ZONING DISTRICT	**COMMUNITY FACILITY (CF - VILLAGE OF WELLINGTON)**
PROPOSED USE	**CHURCH / PLACE OF WORSHIP 958 SEATS**
	73-42-43-27-05-026-0061
GROSS LOT AREA	**10.00 AC. (435,600 SF)**
TOTAL BUILDING FLOOR AREA	**31,309 SF**
Phase 1 area = 24,359 SF	
Phase 2 addition = 6,950 SF	
FLOOR AREA RATIO (MAX. .35)	**.07 FAR**
DEVELOPABLE / NET LOT AREA (LESS1.51 AC LAKE MANAGEMENT TRACT)	8.49 AC. (369,824 SF)
BUILDING HEIGHT (MAX. 35')	**28' / ONE-STORY**
BUILDING COVERAGE (MAX. 25%) (includes canopies for weather protection only)	**7.5%**
PERVIOUS / OPEN SPACE (MIN. 20%)	**49.8% (216,929 SF)**
IMPERVIOUS AREA	**50.2%**
LAKES	**1.51 AC.**
PARKING REQUIRED	**319 SPACES**
1 SP / 3 SEATS @ 958 SEATS	
HANDICAP REQUIRED : 9 SPACES (FOR 401-500 SPACES PROVIDED)	
PARKING PROVIDED	**423 SPACES (104 SPACE EXCESS)** (Avg. 1 space per 2.26 seats)
HANDICAP PROVIDED : 9 SPACES (number included in total provided above)	
LOADING REQUIRED:	**N/A**

PROPOSED SETBACKS

FRONT:	**879'**
SIDE:	**82.91'**
SIDE:	**92.61'**
REAR:	**90.59'**

PROJECT INFORMATION:

Church Staff =	**12-15 persons (typ.)**
Hours of operation =	**Monday - Thursday 8:00am-5:00pm**
Services (Experiances) =	**Saturday (2) - 5:30pm & 6:30pm**
	Sunday (4) - 8:30am, 9:00am, 10:30am & 12:00pm

NOTES

1. BASE INFORMATION FOR THIS PROJECT WAS OBTAINED FROM A SURVEY PREPARED BY WANTMAN GROUP, INC. DATED 4-4-08
2. SITE IMPROVEMENTS SUCH AS PAVING, DRAINAGE, WATER AND SEWER WILL REQUIRE SEPARATE PERMITTING AND INSPECTION THROUGH THE ENGINEERING DIVISION.
3. THE COMMUNITY FACILITIES ZONING DISTRICT (CF) DOES NOT HAVE PROPERTY DEVELOPMENT REGULATIONS (PER LDR SEC. 6.5.1)

CONDITIONS OF APPROVAL

This petition is approved with the following Conditions of Approval:
1. This site plan is certified pursuant to the provisions of Section 5.6 of the Wellington LDR. Certification confirms only the site plan meets the requirements of Section 5.6 and authorizes only the particular site configuration, layout and level of impacts. The certification of this site plan does not indicate the project has met the requirements of Section 8 of the LDR or other engineering standards and specifications. Approval from the Village Engineer pursuant to the requirements of Section 8 shall be required prior to the issuance of any building permits. Modifications required by the Village Engineer pursuant to Section 8 may necessitate modifications to this site plan. (Engineering)

2. Architectural Review Board (ARB) approval is required for the elevations, colors and signs prior to permitting. (Planning and Zoning)

3. Building permits shall not be issued after December 31, 2011, unless a time extension has been approved by the Village Engineer based upon an approved traffic study which complies with the mandatory Traffic Performance Standards in place at the time of the request. (Traffic)

4. The County traffic concurrency approval is subject to the Project Aggregation Rules set forth in the Traffic Performance Standards Ordinance.

5. The following conditions are per FDOT access approval letter regarding the construction of the southbound right turn lane:
a.) The property owner shall construct on SR 7 at the Project's entrance, a right-turn lane north approach.
b.) This construction shall be concurrent with the paving and drainage improvement for the site. The property owner shall pay any and all costs associated with the construction. These costs shall include, but are not limited to, utility relocations and acquisition of any additional required right-of-way.
c.) All permits shall be obtained prior to the issuance of the first Building Permit.
d.) Construction shall be completed prior to the issuance of the first Certificate of Occupancy.

6. The 20 feet water/sewer easement on the south-west property line shall be vacated / abandoned.

7. Prior to Building Permits and/or commencing site development, an Engineering Land Development Permit is required.

8. Prior to commencing site development, applicant shall obtain all required building and engineering permits. A separate Building Permit and Application shall be required for the building, signage and dumpster enclosure(s).

9. Prior to the issuance of any certificates of occupancy, final approval is required from Engineering Department.

10. Landscaping or permanent structures shall not be placed in utility / drainage easement or over utility / drainage areas. Landscaping shall not encroach within any water/sewer tines or easements.

11. Trees shall be planted a minimum of 15 feet from light poles, unless poles are below the tree canopy.

12. Speed bumps are not allowed now or in the future.

Landscape Architects / Planners

Kilday & Associates
Landscape Architects / Planners
1551 Forum Place
Suite 100A
West Palm Beach, Florida 33401
Phone: (561) 689-5522
Fax: (561)689-2592

This Drawing, as an instrument of service, shall remain the property of KILDAY & ASSOCIATES, INC., and shall NOT be reproduced, published or used in any way without the written permission of the same.

VILLAGE OF WELLINGTON, FLORIDA
FINAL SITE PLAN

LIFE COVENANT CHURCH

WELLINGTON CAMPUS

Scale:	1"= 50'
Date:	11/7/08
Design By:	MLC
Drawn By:	MLC
Check By:	CWW
File No.	08-167.00(xr1563.02)
Drawing No.	08-16

REVISIONS / SUBMISSIONS

- 11/7/08 : FINAL SITE PLAN APP. SUBMITTAL
- 12/19/08 : RESUBMITTAL - DRC COMMENTS
- 1/14/09 DRC CERTIFICATION

SITE PLAN

SP-1 OF 1